Greenbrook North

Mixed Use - (V) Village

Construction Plans

Town of Nolensville, Tennessee
17th Civil District, Williamson County

Property Map 56M, Group "A", Parcels 32.00 and 33.00
Property Map 56, Parcel 117.01 & Property Map 59, Parcel 43.00
Rocky Fork Road

Developer:

Yazdian Construction, Inc.

7175 Nolensville Road - Suite 207
Nolensville, TN 37135
(615) 776-7375
Contact : Fred Yazdian

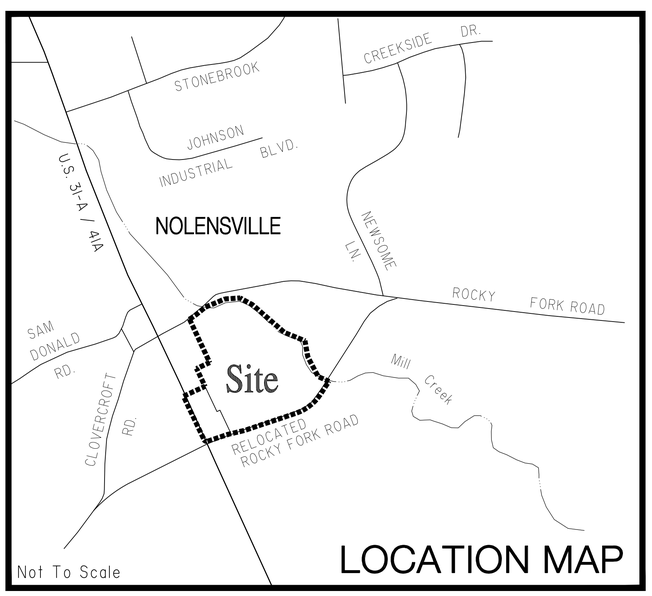

LOCATION MAP

Date: November 7, 2016

Anderson, Delk, Epps & Associates Inc.

ENGINEERING/PLANNING/SURVEYING
618 GRASSMERE PARK DRIVE / SUITE 4
NASHVILLE, TENNESSEE 37211
(615)331-0809

ANDERSON, DELK, EPPS & ASSOCIATES INC. WILL NOT BE PROVIDING CONSTRUCTION ADMINISTRATION SERVICES WITH REGARD TO THE PROJECT HEREIN NAMED "GREENBROOK NORTH".

SHEET INDEX

- ☐ SITE PLAN ____ 1 OF 1
- ☐ GRADING & DRAINAGE PLAN (OVERALL PLAN) ____ 1 OF 1
- ☐ EROSION CONTROL PLAN (OVERALL PLAN) ____ 1 OF 3 THROUGH 3 OF 3
- ☐ DETAIL SHEET ____ 1 OF 2 THROUGH 2 OF 2
- ☐ UTILITY PLAN (OVERALL PLAN) ____ 1 OF 1
- ☐ SEWER PLAN (PLAN/PROFILE) ____ 1 OF 1
- ☐ LANDSCAPING PLAN ____ 1 OF 4 THROUGH 4 OF 4

☐ INDICATES PLANS IN THIS SET

Notice of Intent TNR No. _____

METRO PROJECT NO.
_____ (SEWER)

JOB No. 14-123

Line Table		
Line #	Length	Direction
L1	144.18'	S24° 50' 54"E
L2	118.22'	S65° 09' 06"W
L3	161.39'	S25° 19' 31"E
L4	194.88'	S65° 17' 31"W
L5	100.00'	S25° 19' 19"E
L6	130.00'	S25° 19' 19"E
L7	164.80'	S25° 19' 19"E
L8	174.11'	N71° 31' 05"E
L9	28.09'	N76° 15' 42"E
L10	116.68'	N76° 16' 24"E
L11	442.04'	N71° 31' 04"E
L12	126.34'	N33° 02' 07"E

Line Table		
Line #	Length	Direction
L13	95.94'	N66° 41' 00"W
L14	182.79'	N27° 44' 29"W
L15	135.34'	N10° 23' 21"W
L16	181.75'	N67° 45' 22"W
L17	348.96'	N49° 04' 38"W
L18	114.94'	N61° 23' 43"W
L19	125.66'	S86° 13' 08"W
L20	174.10'	S67° 22' 23"W
L21	101.87'	S50° 49' 14"W
L22	61.91'	S55° 10' 46"W
L23	248.45'	S24° 50' 54"E

Curve Table						
CURVE No.	DELTA	RADIUS	ARC	TANGENT	CHORD	CHORD BRG
C1	083°09'36"	25.00'	36.29'	22.18'	33.18'	S66°54'07"E
C2	038°29'22"	389.93'	261.94'	136.13'	257.04'	N52°16'41"E

Boundary Detail

1"=300'

LOCATION MAP

PAVEMENT DETAIL

n.t.s.

NOTE : ALL PAVEMENT THICKNESSES LISTED ARE AT FULL COMPACTION OF MATERIAL

Bulk Regulations

VILLAGE (V) ZONING - HISTORIC DISTRICT OVERLAY

MIN. LOT WIDTH AT BUILDING AREA	N/A
FRONT SETBACK	5' MIN. (ARTERIAL) 15' MAX (ARTERIAL)
MINIMUM SIDE SETBACK	3' (INTERIOR) 5' (EXTERIOR)
MINIMUM REAR SETBACK	10'
MAXIMUM HEIGHT	35'
MAXIMUM I.S.R.	0.60
MAXIMUM F.A.R.	0.35

GENERAL NOTES:

1. PROPERTY MAP 56M, GROUP "A", PARCELS 32.00 & 33.00
   PROPERTY MAP 59, PARCEL 43.00
   PROPERTY MAP 56, PARCEL 117.01
   17th CIVIL DISTRICT, WILLIAMSON COUNTY, TENNESSEE
2. OWNERS:
   MAP 56M - PARCEL 32.00
   SETH YAZDIAN
   3624 BRIGHTON ROAD
   NASHVILLE, TN 37205
   DEED BOOK 6478, PAGE 975, R.O.W.C.
   MAP 56M - PARCEL 33.00
   SETH YAZDIAN
   3624 BRIGHTON ROAD
   NASHVILLE, TN 37205
   DEED BOOK 6331, PAGE 370, R.O.W.C.
   MAP 59 - PARCEL 43.00
   GRANDVIEW EIGHT LLC
   7175 NOLENSVILLE RD - SUITE 207
   NOLENSVILLE, TN 37135
   DEED BOOK 6510, PAGE 745, R.O.W.C.
   MAP 56 - PARCEL 117.01
   GRANDVIEW EIGHT LLC
   7175 NOLENSVILLE RD - SUITE 207
   NOLENSVILLE, TN 37135
   DEED BOOK 5369, PAGE 13, R.O.W.C.
3. DEVELOPER: YAZDIAN CONSTRUCTION INC.
   7175 NOLENSVILLE RD - SUITE 207
   NOLENSVILLE, TN 37135
4. ENGINEER/SURVEYOR: ANDERSON, DELK, EPPS & ASSOCIATES INC.
   618 GRASSMERE PARK DRIVE, SUITE 4
   NASHVILLE, TN 37211
   (615) 331-0809
5. EXISTING ZONING: V (VILLAGE) - HDO (HISTORIC DISTRICT OVERLAY)
6. PROPOSED USES: RETAIL / OFFICE / RESIDENTIAL / RESTAURANT / OTHER USES AS PERMITTED IN VILLAGE ZONING
7. SITE CONTAINS 20.032 Ac.± (872,583 SQ. FT.)
8. MAXIMUM ISR: 0.60
   PROPOSED ISR: 0.22
9. MAXIMUM FAR: 0.35
   PROPOSED FAR: 0.15
10. BUILDING SETBACKS: FRONT = 5' MIN (ARTERIAL)
    15' MAX (ARTERIAL)
    SIDE = 3' MIN (INTERIOR)
    5' MIN (EXTERIOR)
    REAR = 10' MIN
11. PARKING PROVIDED : 168 SPACES (INCLUDING HANDICAP ACCESSIBLE SPACES)
12. THIS PROPERTY IS LOCATED IN ZONES "AE" AND "X" AS SHOWN ON F.E.M.A. MAP No. 47187C0 235F, EFFECTIVE DATE SEPTEMBER 29, 2006.
13. ALL BUILDINGS ARE PROPOSED.
14. SIDEWALK TO BE INSTALLED ALONG NOLENSVILLE PIKE AND ROCKY FORK ROAD FRONTAGE.
15. BUILDING FLOOR AREA: SEE SITE DATA
16. ALL PARKING AND DRIVE AISLES ARE INGRESS AND EGRESS EASEMENTS.
17. FLOODPLAIN LINE SHOWN PLOTTED GRAPHICALLY AND BY ELEVATION AS SHOWN ON FEMA MAP NO. 47187C0 235F

SITE DATA

HISTORICAL DISTRICT AND VILLLAGE DISTRICT - MIXED USE

- SITE AREA : 20.032 Ac.± (872,583 SQ. FT.)
- COMMERCIAL/RETAIL/OFFICE/RESTURANT : 25,158 SQ. FT.
- TOWNHOMES WITH 2 CAR GARAGE : 28 UNITS
- SURFACE PARKING : 168 SPACES
- GARAGE PARKING : 56 SPACES

THIS PLAN HAS BEEN DESIGNED TO MEET THE TOWN OF NOLENSVILLE STANDARDS AND THE APPROVAL OF THE PLANNING COMMISSION. CHANGES SHALL NOT BE MADE TO THE APPROVED SITE PLAN UNLESS APPROVED BY EITHER THE TOWN ENGINEER OR TOWN PLANNER.

SITE PLAN

REVISIONS: 11-28-16 AS PER TOWN OF NOLENSVILLE

Yazdian Conststruction Inc.
DEVELOPER

Anderson, Delk, Epps & Associates Inc.
ENGINEERING/PLANNING/SURVEYING
618 GRASSMERE PARK DRIVE / SUITE 4
NASHVILLE, TENNESSEE 37211

REGISTERED ENGINEER AND ARCHITECTURE
TENNESSEE

Greenbrook North

NOLENSVILLE, TENNESSEE

SITE PLAN

DATE : 11 - 07 - 16

JOB No. 14 - 123

SHEET 1 OF 1

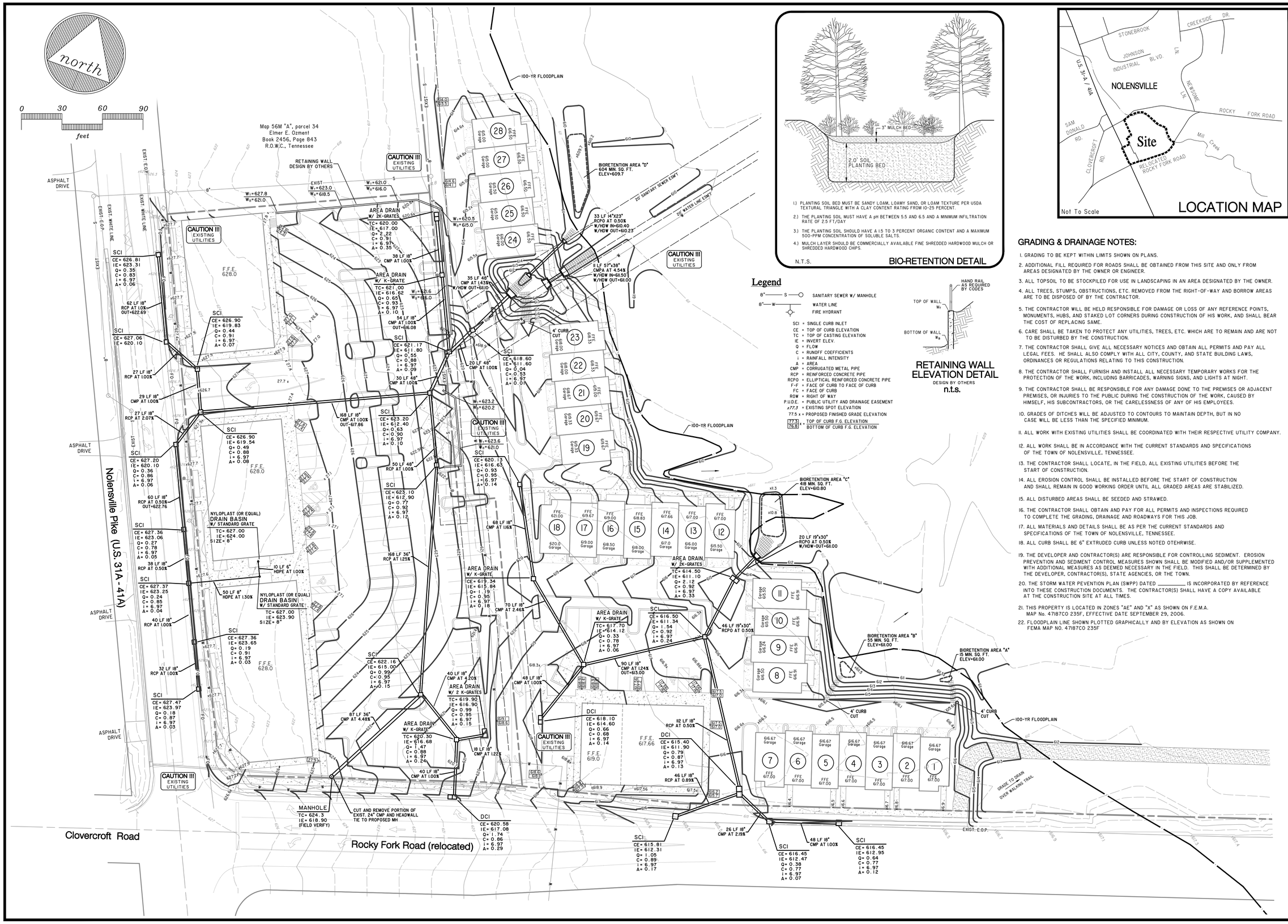

Legend

- 8" —— S —— SANITARY SEWER W/ MANHOLE
- 8" —— W —— WATER LINE
- FIRE HYDRANT

SCI = SINGLE CURB INLET
CE = TOP OF CURB ELEVATION
TC = TOP OF CASTING ELEVATION
IE = INVERT ELEV.
Q = FLOW
C = RUNOFF COEFFICIENTS
i = RAINFALL INTENSITY
A = AREA
CMP = CORRUGATED METAL PIPE
RCP = REINFORCED CONCRETE PIPE
RCPO = ELLIPTICAL REINFORCED CONCRETE PIPE
F-F = FACE OF CURB TO FACE OF CURB
FC = FACE OF CURB
ROW = RIGHT OF WAY
P.U.D.E. = PUBLIC UTILITY AND DRAINAGE EASEMENT
x77.7 = EXISTING SPOT ELEVATION
77.5 x = PROPOSED FINISHED GRADE ELEVATION
77.3 / 76.8 x = TOP OF CURB F.G. ELEVATION / BOTTOM OF CURB F.G. ELEVATION

RETAINING WALL ELEVATION DETAIL
DESIGN BY OTHERS
n.t.s.

GRADING & DRAINAGE NOTES:

1. GRADING TO BE KEPT WITHIN LIMITS SHOWN ON PLANS.
2. ADDITIONAL FILL REQUIRED FOR ROADS SHALL BE OBTAINED FROM THIS SITE AND ONLY FROM AREAS DESIGNATED BY THE OWNER OR ENGINEER.
3. ALL TOPSOIL TO BE STOCKPILED FOR USE IN LANDSCAPING IN AN AREA DESIGNATED BY THE OWNER.
4. ALL TREES, STUMPS, OBSTRUCTIONS, ETC. REMOVED FROM THE RIGHT-OF-WAY AND BORROW AREAS ARE TO BE DISPOSED OF BY THE CONTRACTOR.
5. THE CONTRACTOR WILL BE HELD RESPONSIBLE FOR DAMAGE OR LOSS OF ANY REFERENCE POINTS, MONUMENTS, HUBS, AND STAKED LOT CORNERS DURING CONSTRUCTION OF HIS WORK, AND SHALL BEAR THE COST OF REPLACING SAME.
6. CARE SHALL BE TAKEN TO PROTECT ANY UTILITIES, TREES, ETC. WHICH ARE TO REMAIN AND ARE NOT TO BE DISTURBED BY THE CONSTRUCTION.
7. THE CONTRACTOR SHALL GIVE ALL NECESSARY NOTICES AND OBTAIN ALL PERMITS AND PAY ALL LEGAL FEES. HE SHALL ALSO COMPLY WITH ALL CITY, COUNTY, AND STATE BUILDING LAWS, ORDINANCES OR REGULATIONS RELATING TO THIS CONSTRUCTION.
8. THE CONTRACTOR SHALL FURNISH AND INSTALL ALL NECESSARY TEMPORARY WORKS FOR THE PROTECTION OF THE WORK, INCLUDING BARRICADES, WARNING SIGNS, AND LIGHTS AT NIGHT.
9. THE CONTRACTOR SHALL BE RESPONSIBLE FOR ANY DAMAGE DONE TO THE PREMISES OR ADJACENT PREMISES, OR INJURIES TO THE PUBLIC DURING THE CONSTRUCTION OF THE WORK, CAUSED BY HIMSELF, HIS SUBCONTRACTORS, OR THE CARELESSNESS OF ANY OF HIS EMPLOYEES.
10. GRADES OF DITCHES WILL BE ADJUSTED TO CONTOURS TO MAINTAIN DEPTH, BUT IN NO CASE WILL BE LESS THAN THE SPECIFIED MINIMUM.
11. ALL WORK WITH EXISTING UTILITIES SHALL BE COORDINATED WITH THEIR RESPECTIVE UTILITY COMPANY.
12. ALL WORK SHALL BE IN ACCORDANCE WITH THE CURRENT STANDARDS AND SPECIFICATIONS OF THE TOWN OF NOLENSVILLE, TENNESSEE.
13. THE CONTRACTOR SHALL LOCATE, IN THE FIELD, ALL EXISTING UTILITIES BEFORE THE START OF CONSTRUCTION.
14. ALL EROSION CONTROL SHALL BE INSTALLED BEFORE THE START OF CONSTRUCTION AND SHALL REMAIN IN GOOD WORKING ORDER UNTIL ALL GRADED AREAS ARE STABILIZED.
15. ALL DISTURBED AREAS SHALL BE SEEDED AND STRAWED.
16. THE CONTRACTOR SHALL OBTAIN AND PAY FOR ALL PERMITS AND INSPECTIONS REQUIRED TO COMPLETE THE GRADING, DRAINAGE AND ROADWAYS FOR THIS JOB.
17. ALL MATERIALS AND DETAILS SHALL BE AS PER THE CURRENT STANDARDS AND SPECIFICATIONS OF THE TOWN OF NOLENSVILLE, TENNESSEE.
18. ALL CURB SHALL BE 6" EXTRUDED CURB UNLESS NOTED OTEHRWISE.
19. THE DEVELOPER AND CONTRACTOR(S) ARE RESPONSIBLE FOR CONTROLLING SEDIMENT. EROSION PREVENTION AND SEDIMENT CONTROL MEASURES SHOWN SHALL BE MODIFIED AND/OR SUPPLEMENTED WITH ADDITIONAL MEASURES AS DEEMED NECESSARY IN THE FIELD. THIS SHALL BE DETERMINED BY THE DEVELOPER, CONTRACTOR(S), STATE AGENCIES, OR THE TOWN.
20. THE STORM WATER PEVENTION PLAN (SWPP) DATED _____ IS INCORPORATED BY REFERENCE INTO THESE CONSTRUCTION DOCUMENTS. THE CONTRACTOR(S) SHALL HAVE A COPY AVAILABLE AT THE CONSTRUCTION SITE AT ALL TIMES.
21. THIS PROPERTY IS LOCATED IN ZONES "AE" AND "X" AS SHOWN ON F.E.M.A. MAP No. 47187C0 235F, EFFECTIVE DATE SEPTEMBER 29, 2006.
22. FLOODPLAIN LINE SHOWN PLOTTED GRAPHICALLY AND BY ELEVATION AS SHOWN ON FEMA MAP NO. 47187C0 235F

GRADING AND DRAINAGE PLAN

REVISIONS: 11-28-16 AS PER TOWN OF NOLENSVILLE

Yazdian Constsruction Inc.
DEVELOPER

Anderson, Delk, Epps & Associates Inc.
ENGINEERING/PLANNING/SURVEYING
618 GRASSMERE PARK DRIVE / SUITE 4
NASHVILLE, TENNESSEE 37211

REGISTERED ENGINEERING FIRM
ANDERSON, DELK, EPPS & ASSOCIATES INC.
CERTIFICATE NO. 2970
TENNESSEE

Greenbrook North

NOLENSVILLE, TENNESSEE

GRADING & DRAINAGE

DATE : 11 - 07 - 16

JOB No. 14 - 123

SHEET 1 OF 1

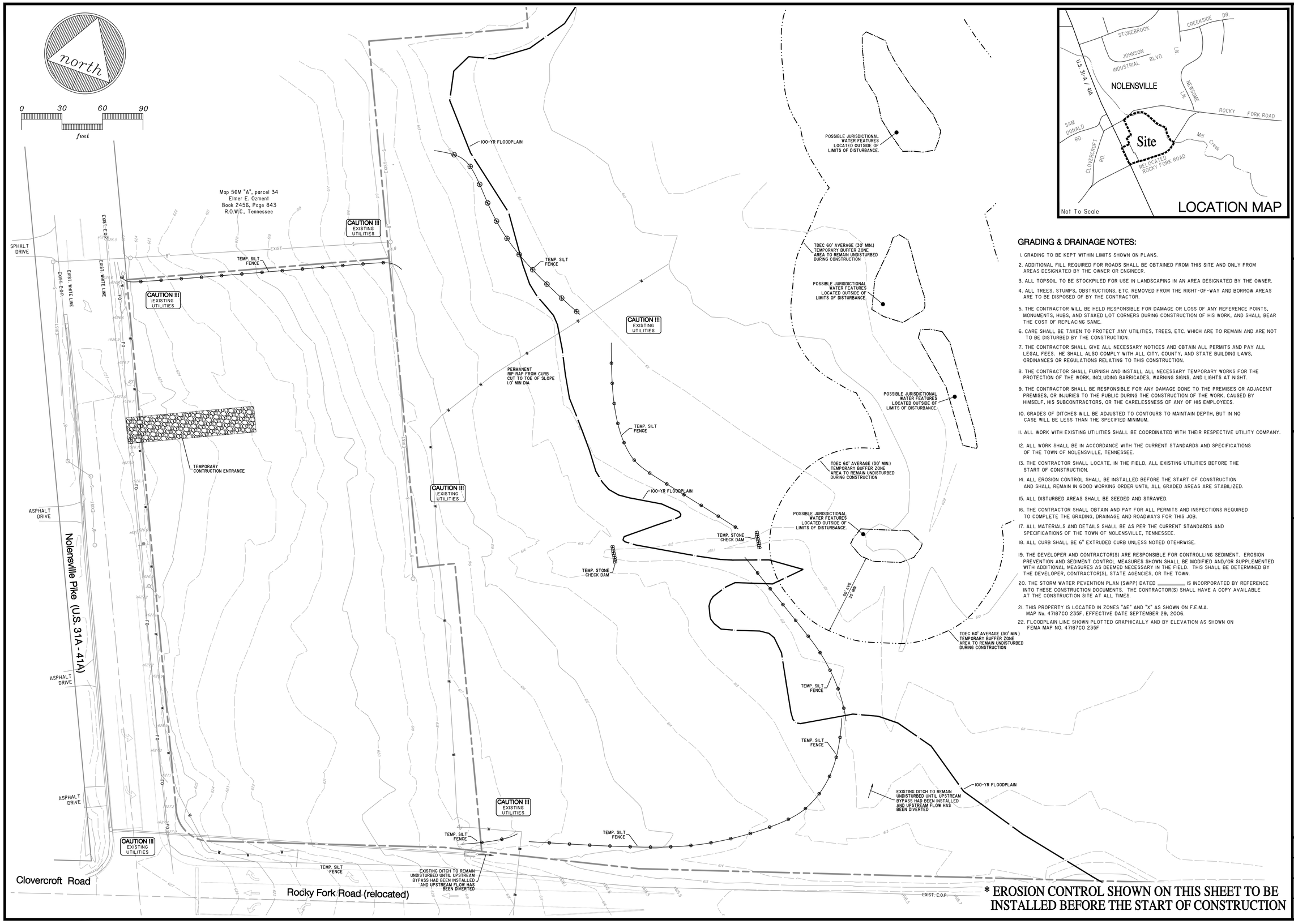

GRADING & DRAINAGE NOTES:

1. GRADING TO BE KEPT WITHIN LIMITS SHOWN ON PLANS.
2. ADDITIONAL FILL REQUIRED FOR ROADS SHALL BE OBTAINED FROM THIS SITE AND ONLY FROM AREAS DESIGNATED BY THE OWNER OR ENGINEER.
3. ALL TOPSOIL TO BE STOCKPILED FOR USE IN LANDSCAPING IN AN AREA DESIGNATED BY THE OWNER.
4. ALL TREES, STUMPS, OBSTRUCTIONS, ETC. REMOVED FROM THE RIGHT-OF-WAY AND BORROW AREAS ARE TO BE DISPOSED OF BY THE CONTRACTOR.
5. THE CONTRACTOR WILL BE HELD RESPONSIBLE FOR DAMAGE OR LOSS OF ANY REFERENCE POINTS, MONUMENTS, HUBS, AND STAKED LOT CORNERS DURING CONSTRUCTION OF HIS WORK, AND SHALL BEAR THE COST OF REPLACING SAME.
6. CARE SHALL BE TAKEN TO PROTECT ANY UTILITIES, TREES, ETC. WHICH ARE TO REMAIN AND ARE NOT TO BE DISTURBED BY THE CONSTRUCTION.
7. THE CONTRACTOR SHALL GIVE ALL NECESSARY NOTICES AND OBTAIN ALL PERMITS AND PAY ALL LEGAL FEES. HE SHALL ALSO COMPLY WITH ALL CITY, COUNTY, AND STATE BUILDING LAWS, ORDINANCES OR REGULATIONS RELATING TO THIS CONSTRUCTION.
8. THE CONTRACTOR SHALL FURNISH AND INSTALL ALL NECESSARY TEMPORARY WORKS FOR THE PROTECTION OF THE WORK, INCLUDING BARRICADES, WARNING SIGNS, AND LIGHTS AT NIGHT.
9. THE CONTRACTOR SHALL BE RESPONSIBLE FOR ANY DAMAGE DONE TO THE PREMISES OR ADJACENT PREMISES, OR INJURIES TO THE PUBLIC DURING THE CONSTRUCTION OF THE WORK, CAUSED BY HIMSELF, HIS SUBCONTRACTORS, OR THE CARELESSNESS OF ANY OF HIS EMPLOYEES.
10. GRADES OF DITCHES WILL BE ADJUSTED TO CONTOURS TO MAINTAIN DEPTH, BUT IN NO CASE WILL BE LESS THAN THE SPECIFIED MINIMUM.
11. ALL WORK WITH EXISTING UTILITIES SHALL BE COORDINATED WITH THEIR RESPECTIVE UTILITY COMPANY.
12. ALL WORK SHALL BE IN ACCORDANCE WITH THE CURRENT STANDARDS AND SPECIFICATIONS OF THE TOWN OF NOLENSVILLE, TENNESSEE.
13. THE CONTRACTOR SHALL LOCATE, IN THE FIELD, ALL EXISTING UTILITIES BEFORE THE START OF CONSTRUCTION.
14. ALL EROSION CONTROL SHALL BE INSTALLED BEFORE THE START OF CONSTRUCTION AND SHALL REMAIN IN GOOD WORKING ORDER UNTIL ALL GRADED AREAS ARE STABILIZED.
15. ALL DISTURBED AREAS SHALL BE SEEDED AND STRAWED.
16. THE CONTRACTOR SHALL OBTAIN AND PAY FOR ALL PERMITS AND INSPECTIONS REQUIRED TO COMPLETE THE GRADING, DRAINAGE AND ROADWAYS FOR THIS JOB.
17. ALL MATERIALS AND DETAILS SHALL BE AS PER THE CURRENT STANDARDS AND SPECIFICATIONS OF THE TOWN OF NOLENSVILLE, TENNESSEE.
18. ALL CURB SHALL BE 6" EXTRUDED CURB UNLESS NOTED OTEHRWISE.
19. THE DEVELOPER AND CONTRACTOR(S) ARE RESPONSIBLE FOR CONTROLLING SEDIMENT. EROSION PREVENTION AND SEDIMENT CONTROL MEASURES SHOWN SHALL BE MODIFIED AND/OR SUPPLEMENTED WITH ADDITIONAL MEASURES AS DEEMED NECESSARY IN THE FIELD. THIS SHALL BE DETERMINED BY THE DEVELOPER, CONTRACTOR(S), STATE AGENCIES, OR THE TOWN.
20. THE STORM WATER PEVENTION PLAN (SWPP) DATED _____ IS INCORPORATED BY REFERENCE INTO THESE CONSTRUCTION DOCUMENTS. THE CONTRACTOR(S) SHALL HAVE A COPY AVAILABLE AT THE CONSTRUCTION SITE AT ALL TIMES.
21. THIS PROPERTY IS LOCATED IN ZONES "AE" AND "X" AS SHOWN ON F.E.M.A. MAP No. 47187C0 235F, EFFECTIVE DATE SEPTEMBER 29, 2006.
22. FLOODPLAIN LINE SHOWN PLOTTED GRAPHICALLY AND BY ELEVATION AS SHOWN ON FEMA MAP NO. 47187C0 235F

*** EROSION CONTROL SHOWN ON THIS SHEET TO BE INSTALLED BEFORE THE START OF CONSTRUCTION**

EROSION CONTROL PLAN

REVISIONS: 11-28-16 AS PER TOWN OF NOLENSVILLE

Yazdian Constsruction Inc.
DEVELOPER

Anderson, Delk, Epps & Associates Inc.
ENGINEERING/PLANNING/SURVEYING
618 GRASSMERE PARK DRIVE / SUITE 4
NASHVILLE, TENNESSEE 37211

Greenbrook North

NOLENSVILLE, TENNESSEE

STAGE 1 - INITIAL EROSION CONTROL

DATE : 11 - 07 - 16

JOB No. 14 - 123

SHEET 1 OF 3

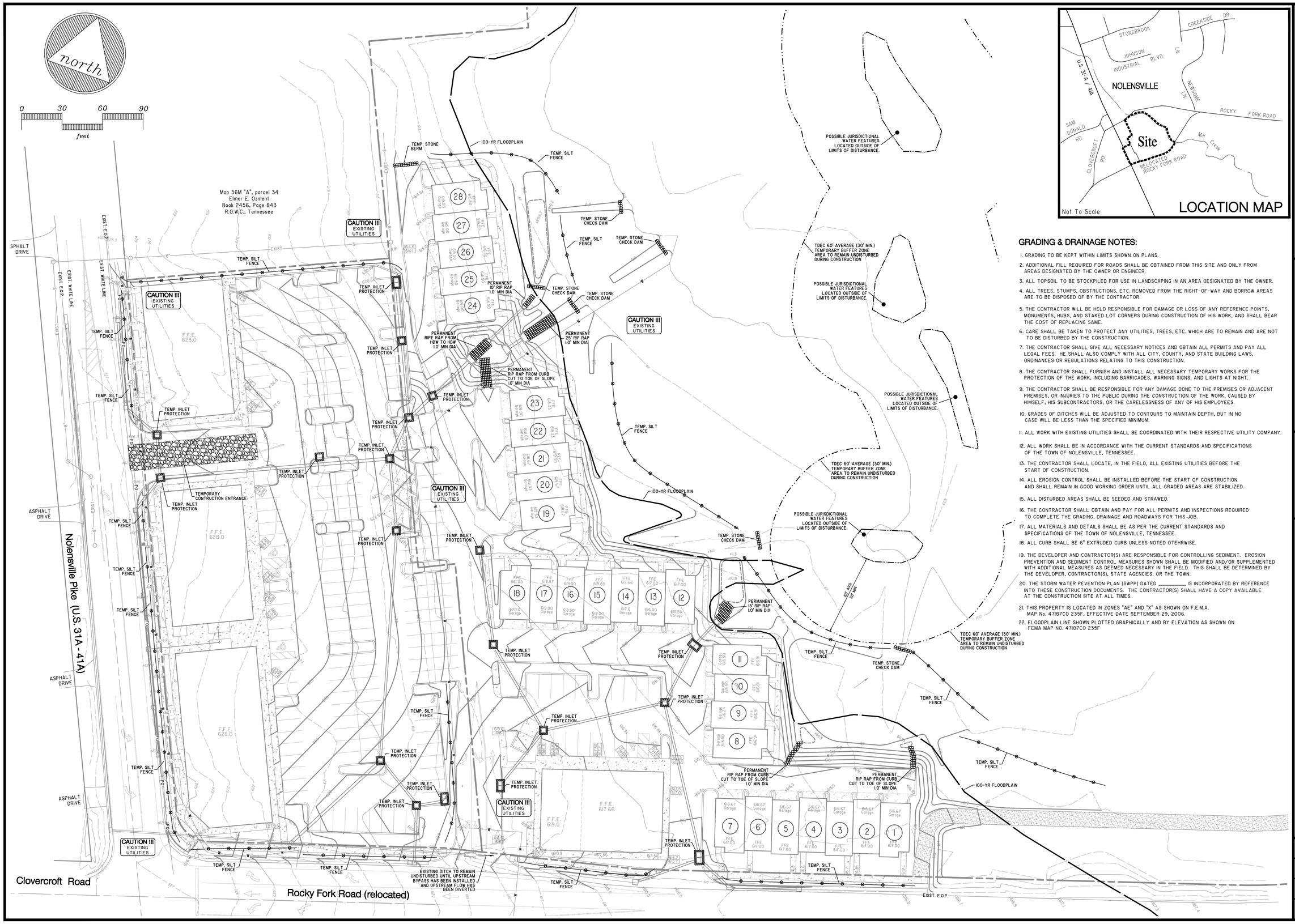

GRADING & DRAINAGE NOTES:

1. GRADING TO BE KEPT WITHIN LIMITS SHOWN ON PLANS.
2. ADDITIONAL FILL REQUIRED FOR ROADS SHALL BE OBTAINED FROM THIS SITE AND ONLY FROM AREAS DESIGNATED BY THE OWNER OR ENGINEER.
3. ALL TOPSOIL TO BE STOCKPILED FOR USE IN LANDSCAPING IN AN AREA DESIGNATED BY THE OWNER.
4. ALL TREES, STUMPS, OBSTRUCTIONS, ETC. REMOVED FROM THE RIGHT-OF-WAY AND BORROW AREAS ARE TO BE DISPOSED OF BY THE CONTRACTOR.
5. THE CONTRACTOR WILL BE HELD RESPONSIBLE FOR DAMAGE OR LOSS OF ANY REFERENCE POINTS, MONUMENTS, HUBS, AND STAKED LOT CORNERS DURING CONSTRUCTION OF HIS WORK, AND SHALL BEAR THE COST OF REPLACING SAME.
6. CARE SHALL BE TAKEN TO PROTECT ANY UTILITIES, TREES, ETC. WHICH ARE TO REMAIN AND ARE NOT TO BE DISTURBED BY THE CONSTRUCTION.
7. THE CONTRACTOR SHALL GIVE ALL NECESSARY NOTICES AND OBTAIN ALL PERMITS AND PAY ALL LEGAL FEES. HE SHALL ALSO COMPLY WITH ALL CITY, COUNTY, AND STATE BUILDING LAWS, ORDINANCES OR REGULATIONS RELATING TO THIS CONSTRUCTION.
8. THE CONTRACTOR SHALL FURNISH AND INSTALL ALL NECESSARY TEMPORARY WORKS FOR THE PROTECTION OF THE WORK, INCLUDING BARRICADES, WARNING SIGNS, AND LIGHTS AT NIGHT.
9. THE CONTRACTOR SHALL BE RESPONSIBLE FOR ANY DAMAGE DONE TO THE PREMISES OR ADJACENT PREMISES, OR INJURIES TO THE PUBLIC DURING THE CONSTRUCTION OF THE WORK, CAUSED BY HIMSELF, HIS SUBCONTRACTORS, OR THE CARELESSNESS OF ANY OF HIS EMPLOYEES.
10. GRADES OF DITCHES WILL BE ADJUSTED TO CONTOURS TO MAINTAIN DEPTH, BUT IN NO CASE WILL BE LESS THAN THE SPECIFIED MINIMUM.
11. ALL WORK WITH EXISTING UTILITIES SHALL BE COORDINATED WITH THEIR RESPECTIVE UTILITY COMPANY.
12. ALL WORK SHALL BE IN ACCORDANCE WITH THE CURRENT STANDARDS AND SPECIFICATIONS OF THE TOWN OF NOLENSVILLE, TENNESSEE.
13. THE CONTRACTOR SHALL LOCATE, IN THE FIELD, ALL EXISTING UTILITIES BEFORE THE START OF CONSTRUCTION.
14. ALL EROSION CONTROL SHALL BE INSTALLED BEFORE THE START OF CONSTRUCTION AND SHALL REMAIN IN GOOD WORKING ORDER UNTIL ALL GRADED AREAS ARE STABILIZED.
15. ALL DISTURBED AREAS SHALL BE SEEDED AND STRAWED.
16. THE CONTRACTOR SHALL OBTAIN AND PAY FOR ALL PERMITS AND INSPECTIONS REQUIRED TO COMPLETE THE GRADING, DRAINAGE AND ROADWAYS FOR THIS JOB.
17. ALL MATERIALS AND DETAILS SHALL BE AS PER THE CURRENT STANDARDS AND SPECIFICATIONS OF THE TOWN OF NOLENSVILLE, TENNESSEE.
18. ALL CURB SHALL BE 6" EXTRUDED CURB UNLESS NOTED OTEHRWISE.
19. THE DEVELOPER AND CONTRACTOR(S) ARE RESPONSIBLE FOR CONTROLLING SEDIMENT. EROSION PREVENTION AND SEDIMENT CONTROL MEASURES SHOWN SHALL BE MODIFIED AND/OR SUPPLEMENTED WITH ADDITIONAL MEASURES AS DEEMED NECESSARY IN THE FIELD. THIS SHALL BE DETERMINED BY THE DEVELOPER, CONTRACTOR(S), STATE AGENCIES, OR THE TOWN.
20. THE STORM WATER PEVENTION PLAN (SWPP) DATED _____ IS INCORPORATED BY REFERENCE INTO THESE CONSTRUCTION DOCUMENTS. THE CONTRACTOR(S) SHALL HAVE A COPY AVAILABLE AT THE CONSTRUCTION SITE AT ALL TIMES.
21. THIS PROPERTY IS LOCATED IN ZONES "AE" AND "X" AS SHOWN ON F.E.M.A. MAP No. 47187C0 235F, EFFECTIVE DATE SEPTEMBER 29, 2006.
22. FLOODPLAIN LINE SHOWN PLOTTED GRAPHICALLY AND BY ELEVATION AS SHOWN ON FEMA MAP NO. 47187C0 235F

EROSION CONTROL PLAN

REVISIONS: 11-28-16 AS PER TOWN OF NOLENSVILLE

Yazdian Conststruction Inc.
DEVELOPER

Anderson, Delk, Epps & Associates Inc.
ENGINEERING/PLANNING/SURVEYING
618 GRASSMERE PARK DRIVE / SUITE 4
NASHVILLE, TENNESSEE 37211

Greenbrook North

NOLENSVILLE, TENNESSEE

STAGE 2 - INTERIM EROSION CONTROL

DATE : 11 - 07 - 16

JOB No. 14 - 123

SHEET 2 OF 3

* EROSION CONTROL SHOWN ON THIS SHEET TO BE INSTALLED AT FINAL STABILIZATION

- -PERMANENT SOIL STABILIZATION TO BEGIN WITHIN 15 DAYS OF FINAL GRADING.
- -CONTROL MEASURES LABELED AS TEMPORARY ARE TO BE REMOVED ONCE UPSTREAM DRAINAGE AREA HAS BEEN STABILIZED
- -SILT FENCE SHOWN ON SHEET 2 OF 3 THAT ARE NOT SHOWN ON THIS SHEET ARE ONLY TO BE REMOVED ONCE THE UPSTREAM DRAINAGE AREA HAS BEEN STABILIZED.
- -CONSTRUCTION ENTRANCE/EXIT TO BE REMOVED ONLY WHEN ROADS ARE PAVED.

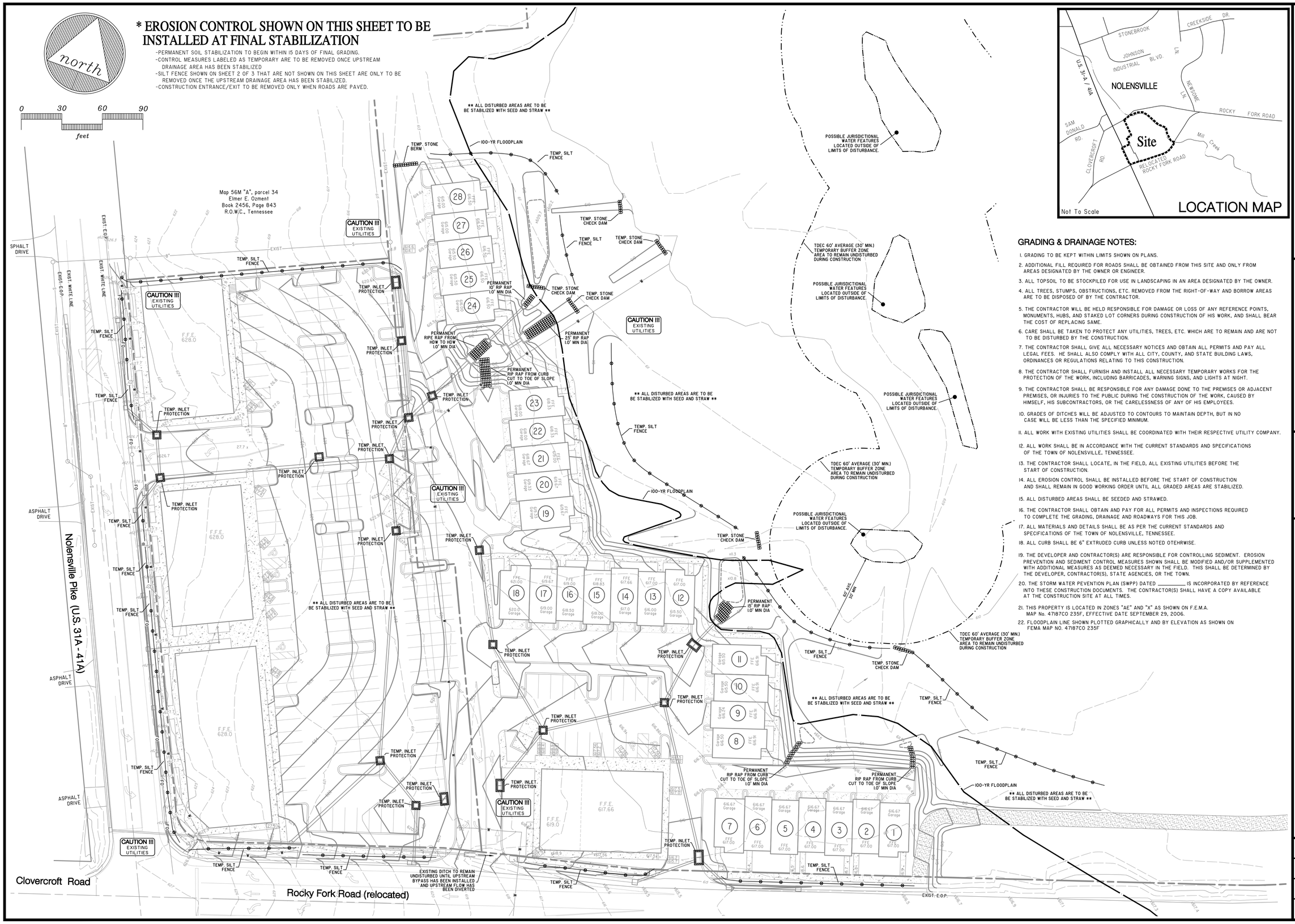

GRADING & DRAINAGE NOTES:

1. GRADING TO BE KEPT WITHIN LIMITS SHOWN ON PLANS.
2. ADDITIONAL FILL REQUIRED FOR ROADS SHALL BE OBTAINED FROM THIS SITE AND ONLY FROM AREAS DESIGNATED BY THE OWNER OR ENGINEER.
3. ALL TOPSOIL TO BE STOCKPILED FOR USE IN LANDSCAPING IN AN AREA DESIGNATED BY THE OWNER.
4. ALL TREES, STUMPS, OBSTRUCTIONS, ETC. REMOVED FROM THE RIGHT-OF-WAY AND BORROW AREAS ARE TO BE DISPOSED OF BY THE CONTRACTOR.
5. THE CONTRACTOR WILL BE HELD RESPONSIBLE FOR DAMAGE OR LOSS OF ANY REFERENCE POINTS, MONUMENTS, HUBS, AND STAKED LOT CORNERS DURING CONSTRUCTION OF HIS WORK, AND SHALL BEAR THE COST OF REPLACING SAME.
6. CARE SHALL BE TAKEN TO PROTECT ANY UTILITIES, TREES, ETC. WHICH ARE TO REMAIN AND ARE NOT TO BE DISTURBED BY THE CONSTRUCTION.
7. THE CONTRACTOR SHALL GIVE ALL NECESSARY NOTICES AND OBTAIN ALL PERMITS AND PAY ALL LEGAL FEES. HE SHALL ALSO COMPLY WITH ALL CITY, COUNTY, AND STATE BUILDING LAWS, ORDINANCES OR REGULATIONS RELATING TO THIS CONSTRUCTION.
8. THE CONTRACTOR SHALL FURNISH AND INSTALL ALL NECESSARY TEMPORARY WORKS FOR THE PROTECTION OF THE WORK, INCLUDING BARRICADES, WARNING SIGNS, AND LIGHTS AT NIGHT.
9. THE CONTRACTOR SHALL BE RESPONSIBLE FOR ANY DAMAGE DONE TO THE PREMISES OR ADJACENT PREMISES, OR INJURIES TO THE PUBLIC DURING THE CONSTRUCTION OF THE WORK, CAUSED BY HIMSELF, HIS SUBCONTRACTORS, OR THE CARELESSNESS OF ANY OF HIS EMPLOYEES.
10. GRADES OF DITCHES WILL BE ADJUSTED TO CONTOURS TO MAINTAIN DEPTH, BUT IN NO CASE WILL BE LESS THAN THE SPECIFIED MINIMUM.
11. ALL WORK WITH EXISTING UTILITIES SHALL BE COORDINATED WITH THEIR RESPECTIVE UTILITY COMPANY.
12. ALL WORK SHALL BE IN ACCORDANCE WITH THE CURRENT STANDARDS AND SPECIFICATIONS OF THE TOWN OF NOLENSVILLE, TENNESSEE.
13. THE CONTRACTOR SHALL LOCATE, IN THE FIELD, ALL EXISTING UTILITIES BEFORE THE START OF CONSTRUCTION.
14. ALL EROSION CONTROL SHALL BE INSTALLED BEFORE THE START OF CONSTRUCTION AND SHALL REMAIN IN GOOD WORKING ORDER UNTIL ALL GRADED AREAS ARE STABILIZED.
15. ALL DISTURBED AREAS SHALL BE SEEDED AND STRAWED.
16. THE CONTRACTOR SHALL OBTAIN AND PAY FOR ALL PERMITS AND INSPECTIONS REQUIRED TO COMPLETE THE GRADING, DRAINAGE AND ROADWAYS FOR THIS JOB.
17. ALL MATERIALS AND DETAILS SHALL BE AS PER THE CURRENT STANDARDS AND SPECIFICATIONS OF THE TOWN OF NOLENSVILLE, TENNESSEE.
18. ALL CURB SHALL BE 6" EXTRUDED CURB UNLESS NOTED OTEHRWISE.
19. THE DEVELOPER AND CONTRACTOR(S) ARE RESPONSIBLE FOR CONTROLLING SEDIMENT. EROSION PREVENTION AND SEDIMENT CONTROL MEASURES SHOWN SHALL BE MODIFIED AND/OR SUPPLEMENTED WITH ADDITIONAL MEASURES AS DEEMED NECESSARY IN THE FIELD. THIS SHALL BE DETERMINED BY THE DEVELOPER, CONTRACTOR(S), STATE AGENCIES, OR THE TOWN.
20. THE STORM WATER PEVENTION PLAN (SWPP) DATED _____ IS INCORPORATED BY REFERENCE INTO THESE CONSTRUCTION DOCUMENTS. THE CONTRACTOR(S) SHALL HAVE A COPY AVAILABLE AT THE CONSTRUCTION SITE AT ALL TIMES.
21. THIS PROPERTY IS LOCATED IN ZONES "AE" AND "X" AS SHOWN ON F.E.M.A. MAP No. 47187C0 235F, EFFECTIVE DATE SEPTEMBER 29, 2006.
22. FLOODPLAIN LINE SHOWN PLOTTED GRAPHICALLY AND BY ELEVATION AS SHOWN ON FEMA MAP NO. 47187C0 235F

EROSION CONTROL PLAN

REVISIONS: 11-28-16 AS PER TOWN OF NOLENSVILLE

Yazdian Constsruction Inc.
DEVELOPER

Anderson, Delk, Epps & Associates Inc.
ENGINEERING/PLANNING/SURVEYING
618 GRASSMERE PARK DRIVE / SUITE 4
NASHVILLE, TENNESSEE 37211

REGISTERED ENGINEER
CHARLES E. EPPS
NO. 102326
TENNESSEE

Greenbrook North

NOLENSVILLE, TENNESSEE

STAGE 3 - FINAL EROSION CONTROL

DATE : 11 - 07 - 16

JOB No. 14 - 123

SHEET 3 OF 3

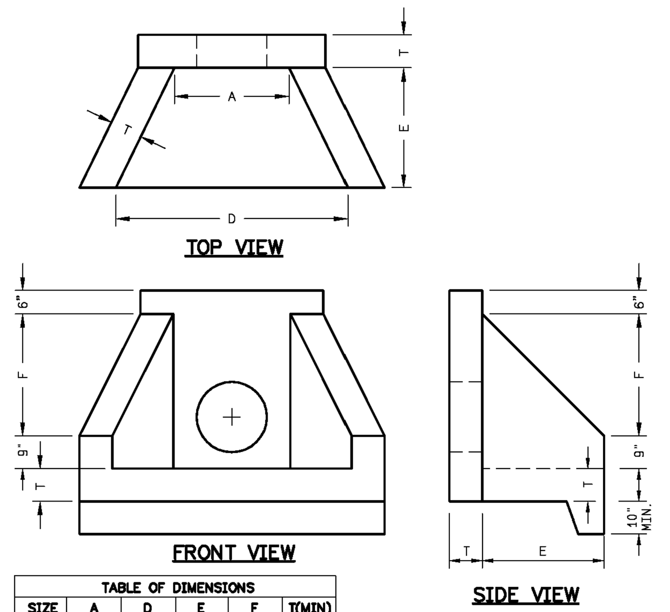

TABLE OF DIMENSIONS					
SIZE	A	D	E	F	T(MIN)
15"	2'-6"	5'-0"	2'-6"	1'-9"	6"
18"	2'-6"	5'-0"	2'-6"	1'-9"	6"
21"	2'-6"	5'-0"	2'-6"	1'-9"	6"
24"	4'-0"	6'-6"	4'-0"	3'-3"	6"
30"	4'-0"	6'-6"	4'-0"	3'-3"	6"
36"	5'-6"	8'-0"	3'-6"	4'-5"	6"
42"	5'-6"	8'-0"	3'-6"	4'-5"	6"
48"	5'-6"	8'-0"	3'-6"	4'-5"	6"
54"	7'-0"	9'-5"	4'-6"	5'-9"	6"
60"	7'-0"	9'-5"	4'-6"	5'-9"	6"
66"	8'-6"	11'-0"	5'-6"	6'-11"	6"
72"	8'-6"	11'-0"	5'-6"	6'-11"	6"

NOTES:

1. CONCRETE SHALL BE 4000 PSI @ 28 DAYS REINFORCED WITH NO. 4 BARS @ 10" O.C. EACH WAY WITH WINGS AND TOE SLAB DOWELLED TO HEADWALL WITH NO. 5 BARS
2. 3/4" CHAMFER ON ALL EXPOSED EDGES.
3. ENERGY DISSIPATORS SHALL BE ADDED WHERE VELOCITIES WARRANT SAME.

REVISION	DATE		
ADOPTED	12-02-1999	Town Of Nolensville — Telephone (615) 776-3633 FAX (615) 776-3634 — A Great Place To Live	PRECAST CONCRETE HEADWALL TYPICAL DETAIL — DR-1 — N.T.S.

DIA.	CONC. CU.YD.	REINF. STEEL
12"	.07	35
15"	.09	45
18"	1.2	55
24"	2.3	105
30"	3.0	130
36"	4.3	180
42"	5.5	230
48"	7.9	350
54"	9.6	410
60"	11.0	480
66"	12.5	520
72"	14.2	590

QUANTITIES INCLUDE CUT-OFF WALL

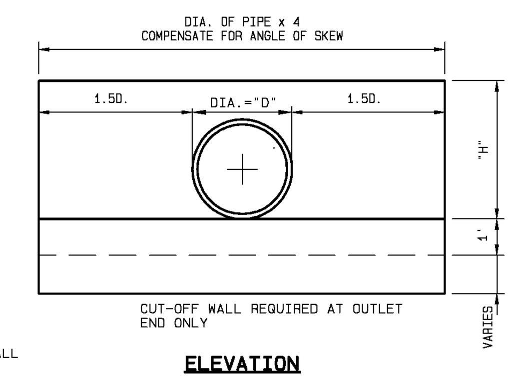

NOTE:

1 DIMENSION "H"="D"+1'-6" MIN. OR AS CALLED FOR ON PLANS.
2 SPECIAL DESIGN REQ'D FOR "H" MORE THAN 8'-0"

* 1'-10" WHERE TRASH RACK IS REQUIRED

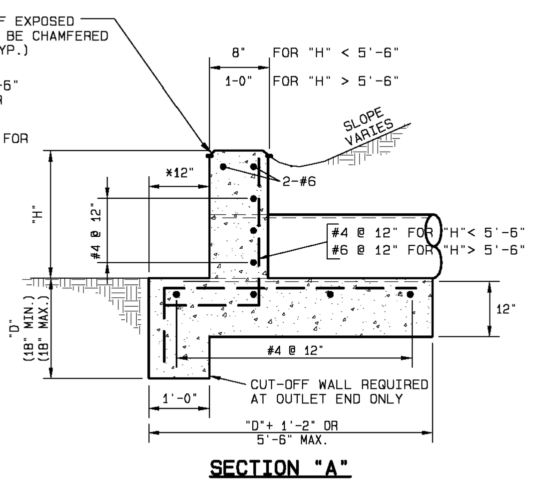

REVISION	DATE		
ADOPTED	12-02-1999	Town Of Nolensville — Telephone (615) 776-3633 FAX (615) 776-3634 — A Great Place To Live	REINFORCED CONCRETE HEADWALL TYPICAL DETAIL — DR-2 — N.T.S.

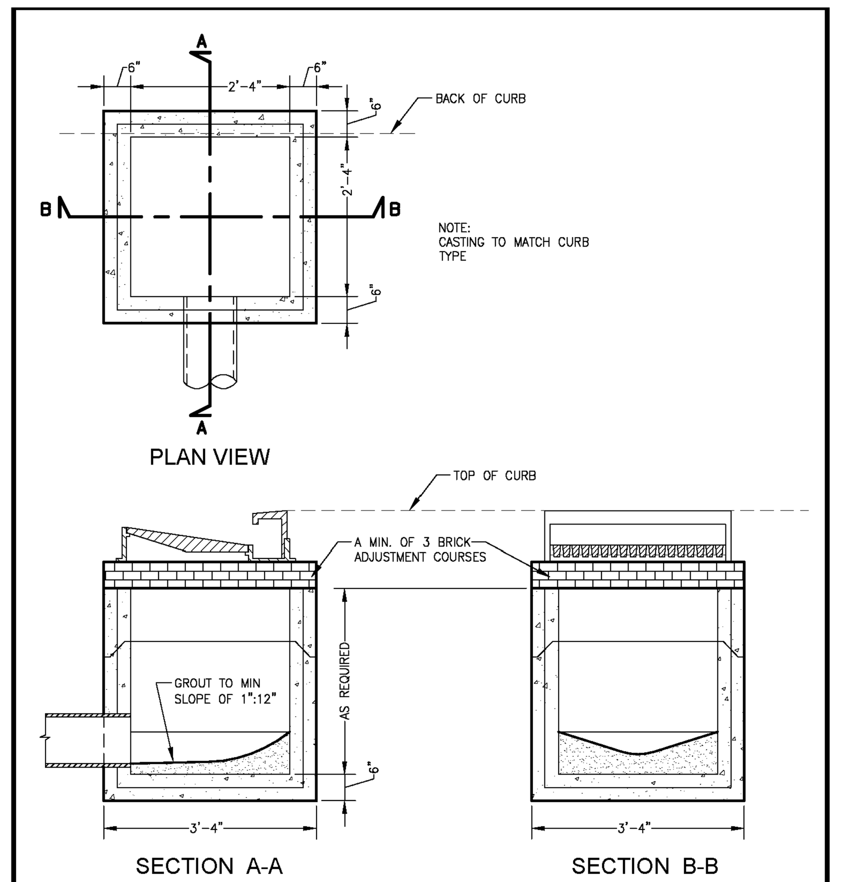

CONCRETE: 4000 psi AT 28 DAYS. MINIMUM REINFORCEMENT: 0.14 SQ. IN./SQ. FT., GRADE 60 STEEL

REVISION	DATE		
ADDED	6-12-2003	Town Of Nolensville — Telephone (615) 776-3633 FAX (615) 776-3634 — A Great Place To Live	SINGLE INLET (PRECAST) — DR-4 — N.T.S.

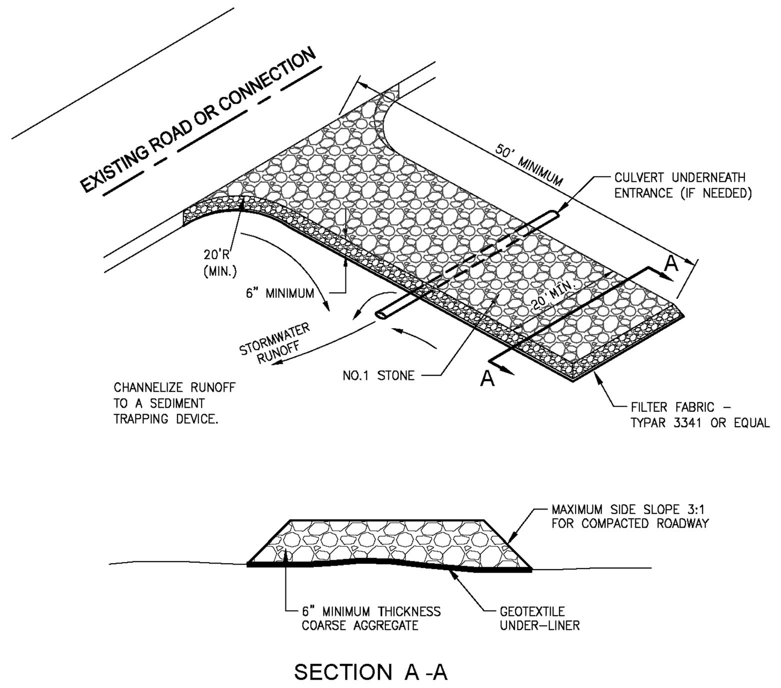

NOTES:

1. CONSTRUCTION ENTRANCE SHALL BE LOCATED WHERE TRAFFIC WILL BE ENTERING OR EXITING THE CONSTRUCTION SITE.
2. CONSTRUCTION ENTRANCE SHALL BE PROPERLY MAINTAINED IN A CONDITION WHICH WILL PREVENT TRACKING OR FLOWING OR SEDIMENT ONTO PUBLIC ROADS/STREETS. PERIODIC TOP DRESSING AND ADDITIONAL STONE IS REQUIRED TO MAINTAIN ENTRANCE IN GOOD WORKING CONDITION.
3. ALL SEDIMENTS SPILLED, WASHED OR TRACKED ONTO PUBLIC ROADWAY SHALL BE CLEANED AND REMOVED IMMEDIATELY.
4. WIDTH SHALL BE INCREASED AS NEEDED TO ACCOMMODATE ANTICIPATED TRAFFIC.

REVISION	DATE		
ADDED	6-12-2003	Town Of Nolensville — Telephone (615) 776-3633 FAX (615) 776-3634 — A Great Place To Live	CONSTRUCTION EXIT — SW-1 — N.T.S.

L = THE DISTANCE SUCH THAT POINT A AND B ARE OF EQUAL ELEVATION.

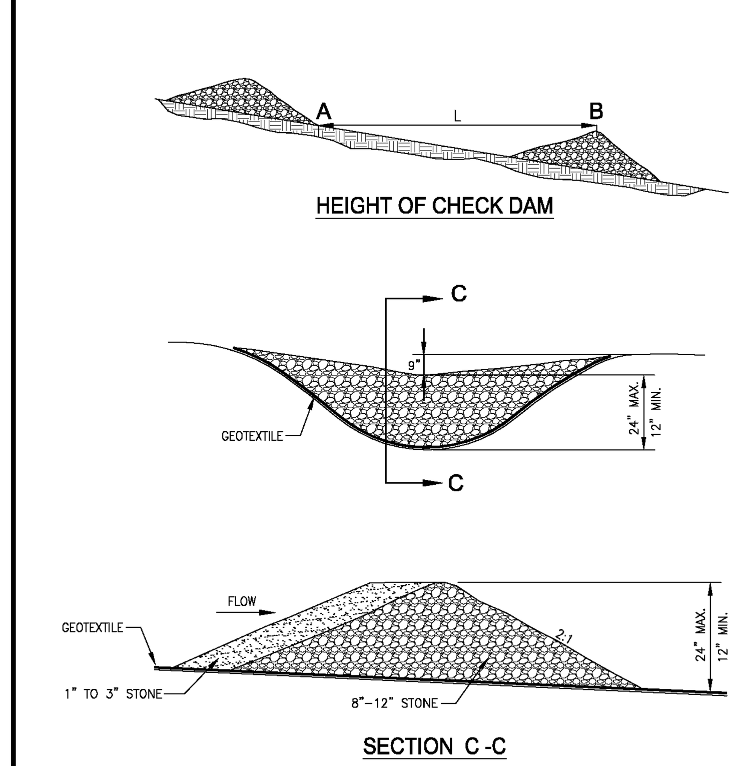

- CHECK DAM SHALL BE KEYED INTO SURFACE 6" MINIMUM.
- STONE AND ROCK SHALL BE CLEAN AND FINES.
- GEOTEXTILE MAY BE USED AS AN ADDITIONAL UPSTREAM FILTER; KEY AND BED GEOTEXTILE.

REVISION	DATE		
ADDED	6-12-2003	Town Of Nolensville — Telephone (615) 776-3633 FAX (615) 776-3634 — A Great Place To Live	CHECK DAM — SW-2 — N.T.S.

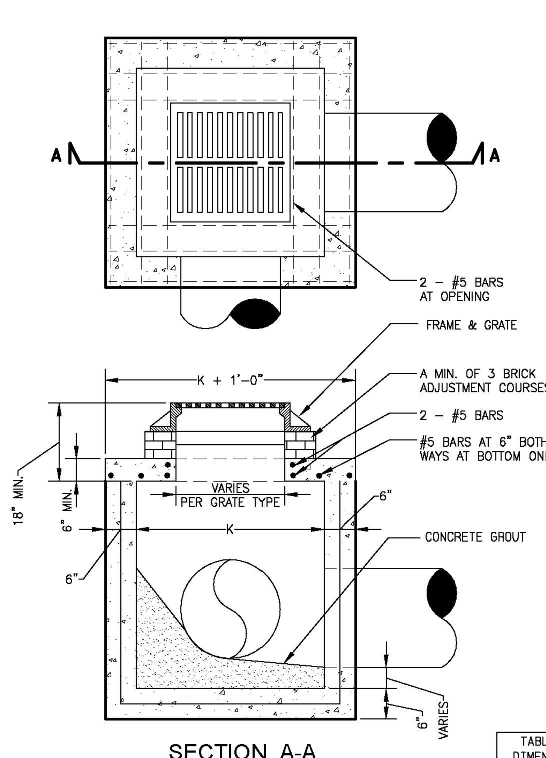

TABLE OF DIMENSIONS	
PIPE	"K"
30"	4'
36"	5'
42"	6'
48"	6'
54"	7'
60"	7'
66"	8'
72"	9'

NOTE:
1. CONCRETE: 4000 psi AT 28 DAYS. MINIMUM REINFORCEMENT: 0.14 SQ. IN./SQ. FT., GRADE 60 STEEL.
2. FRAME AND GRATE SHOWN ARE FOR FLUSH MOUNTED INLET.
3. FOR DOUBLE AND TRIPLE INLETS REFER TO RESPECTIVE DETAILS.
4. CASTING TO MATCH CURB TYPE.

REVISION	DATE		
ADDED	6-12-2003	Town Of Nolensville — Telephone (615) 776-3633 FAX (615) 776-3634 — A Great Place To Live	COMBINATION INLET (PRECAST) — DR-7 — N.T.S.

NOTE: CONTACT SURFACES OF GRATE AND FRAME MARKED "f" ARE TO BE MACHINED.

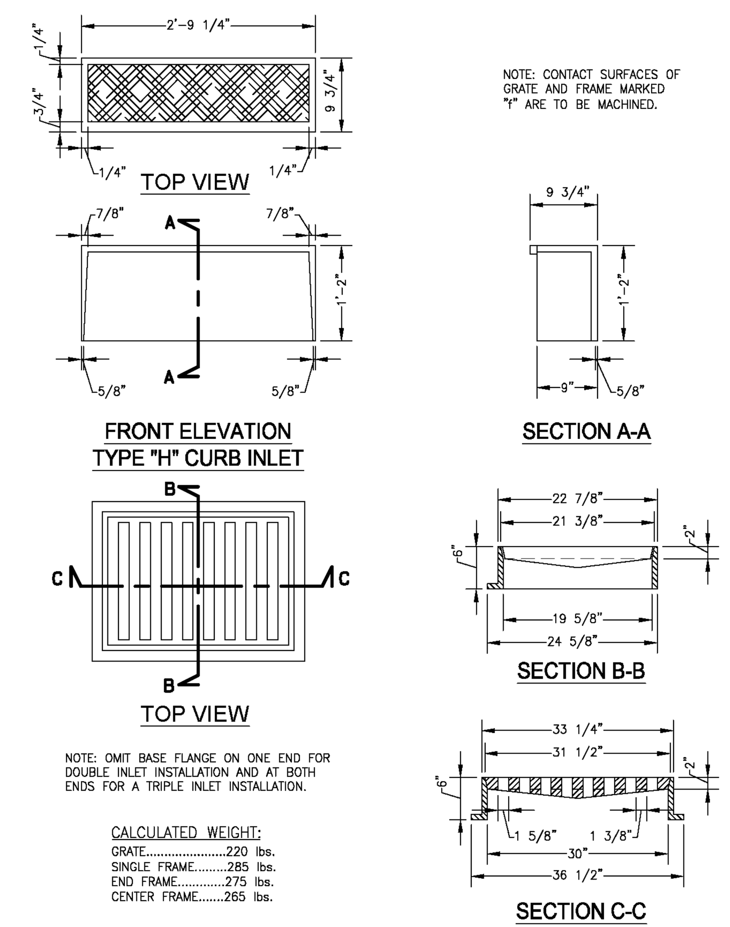

NOTE: OMIT BASE FLANGE ON ONE END FOR DOUBLE INLET INSTALLATION AND AT BOTH ENDS FOR A TRIPLE INLET INSTALLATION.

CALCULATED WEIGHT:
GRATE......................220 lbs.
SINGLE FRAME.........285 lbs.
END FRAME............275 lbs.
CENTER FRAME.......265 lbs.

REVISION	DATE		
ADDED	6-12-2003	Town Of Nolensville — Telephone (615) 776-3633 FAX (615) 776-3634 — A Great Place To Live	CURB AND GUTTER INLET CASTINGS — DR-9 — N.T.S.

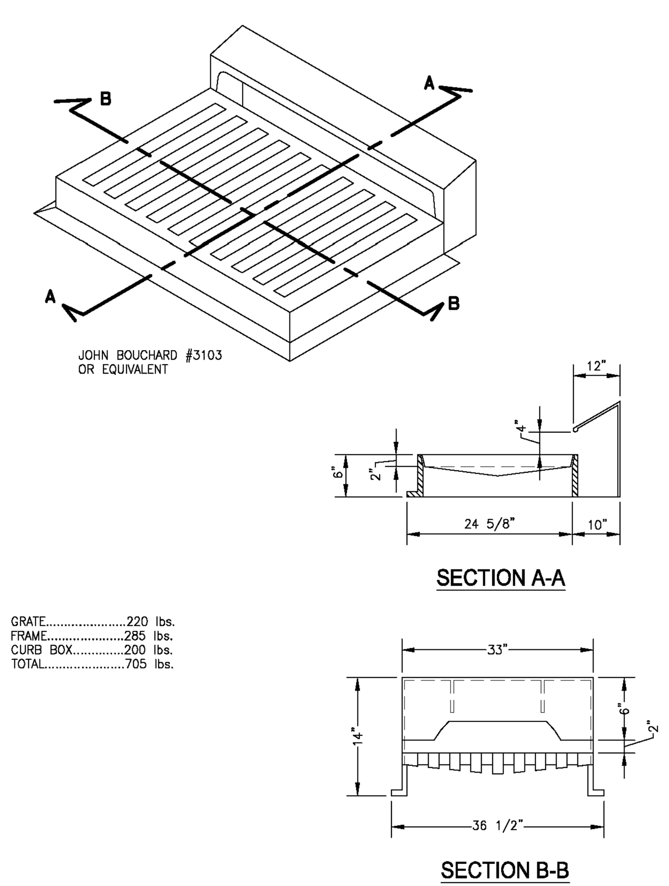

GRATE......................220 lbs.
FRAME......................285 lbs.
CURB BOX.............200 lbs.
TOTAL......................705 lbs.

REVISION	DATE		
ADDED	6-12-2003	Town Of Nolensville — Telephone (615) 776-3633 FAX (615) 776-3634 — A Great Place To Live	STANDARD CATCH BASIN CASTING — DR-10 — N.T.S.

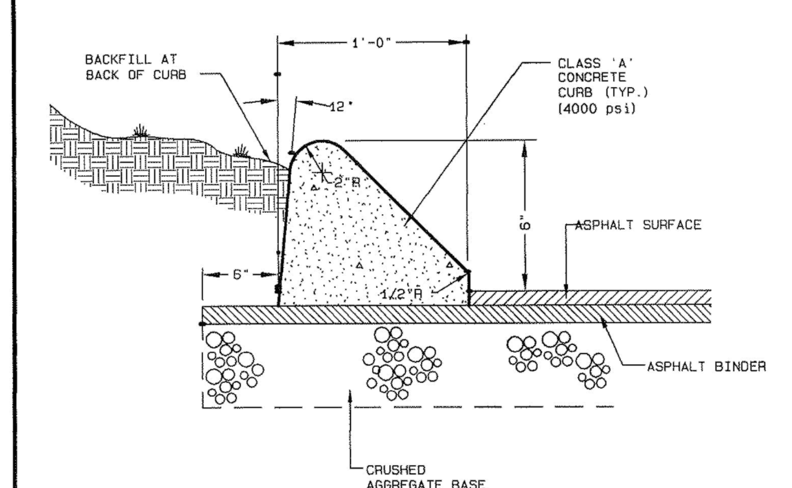

THIS CURB IS ONLY PERMITTED FOR USE IN THE ER ZONING DISTRICT.

REVISION	DATE		
ADOPTED	12-02-1999	Town Of Nolensville — Telephone (615) 776-3633 FAX (615) 776-3634 — A Great Place To Live	MOUNTABLE CURB TYPICAL DETAIL — RW-12 — N.T.S.
AMENDED	8-14-2003		

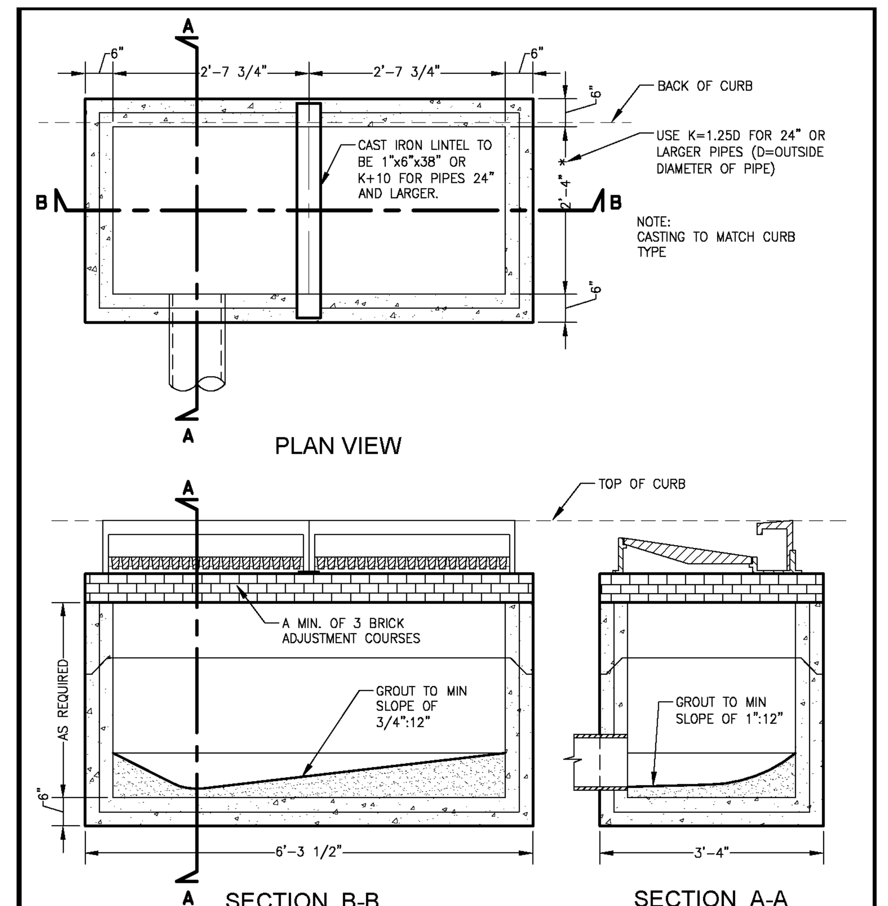

CONCRETE: 4000 psi AT 28 DAYS. MINIMUM REINFORCEMENT: 0.14 SQ. IN./SQ. FT., GRADE 60 STEEL

REVISION	DATE		
ADDED	6-12-2003	Town Of Nolensville — Telephone (615) 776-3633 FAX (615) 776-3634 — A Great Place To Live	DOUBLE INLET (PRECAST) — DR-5 — N.T.S.

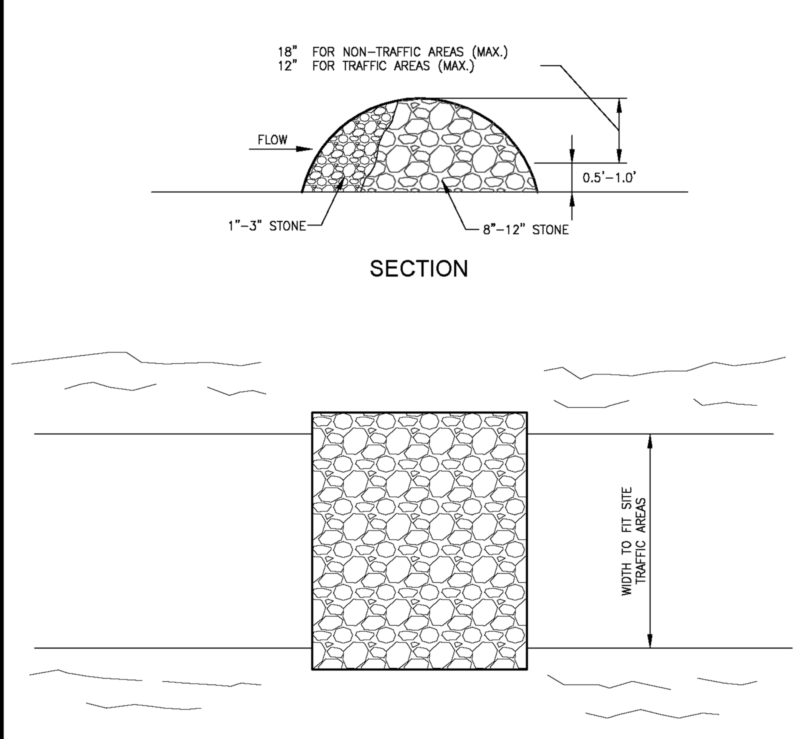

- ROCK FILTERS CAN BE USED IN A LINEAR METHOD OF CONSTRUCTION. THIS COULD SUPPLEMENT OTHER METHODS OF LINEAR MEASURES (SUCH AS SILT FENCE), SEPARATELY OR WITH OTHER SEDIMENT CONTROL METHODS.
- REWORK, REPLACE STONE AND MAINTAIN AS OFTEN AS REQUIRED TO ENSURE EFFECTIVE FUNCTION.

REVISION	DATE		
ADDED	6-12-2003	Town Of Nolensville — Telephone (615) 776-3633 FAX (615) 776-3634 — A Great Place To Live	ROCK FILTER CONSTRUCTION — SW-3 — N.T.S.

Notes:

1. Use clean aggregate (½" to ¾") such as TDOT #4 or #5 or washed #57.
2. Periodically change old gravel with new clean gravel. Old gravel may be used as backfill material.
3. Blocks stacked on each other must be secured from movement, such as inserting a piece of 6" or 8" wood.

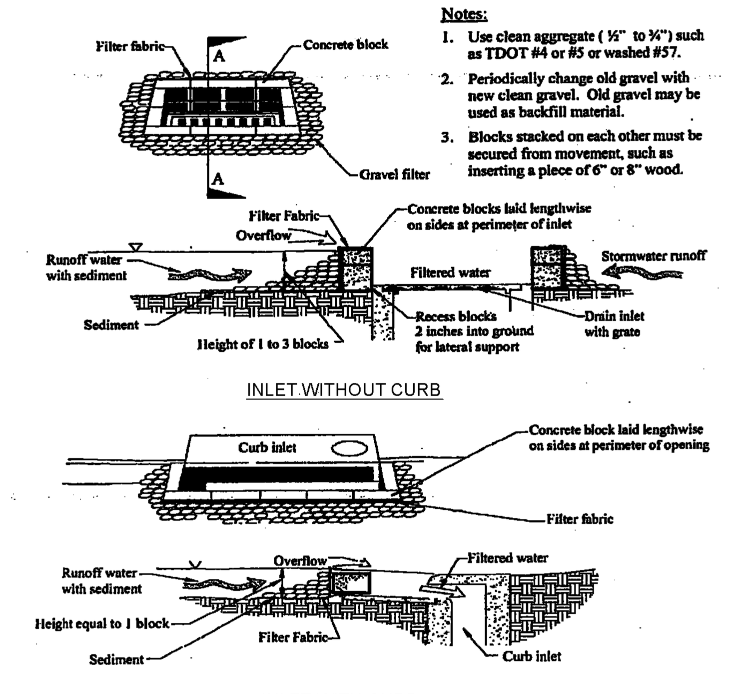

BLOCK AND GRAVEL INLET PROTECTION

REVISION	DATE		
ADDED	6-12-2003	Town Of Nolensville — Telephone (615) 776-3633 FAX (615) 776-3634 — A Great Place To Live	BLOCK AND GRAVEL INLET PROTECTION — SW-4 — N.T.S.

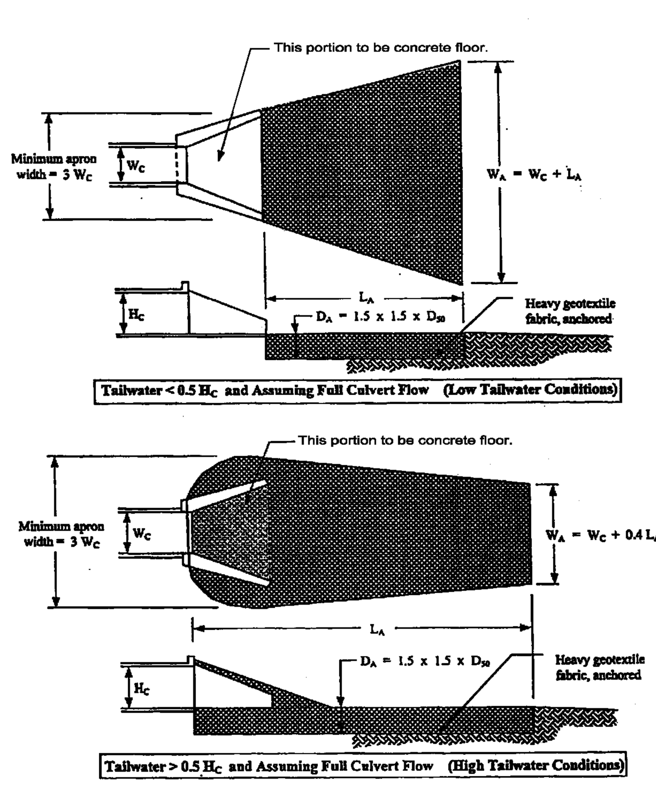

H_C = height of culvert
W_C = width of culvert
L_A = length of riprap apron
W_A = width of riprap apron at end
D_{50} = median riprap size
D_{MAX} = maximum size of riprap = 1.5 D_{50}
D_A = depth of riprap apron = 1.5 D_{MAX}

REVISION	DATE		
ADDED	6-12-2003	Town Of Nolensville — Telephone (615) 776-3633 FAX (615) 776-3634 — A Great Place To Live	OUTLET PROTECTION (PAGE 1 OF 2) — SW-7 — N.T.S.

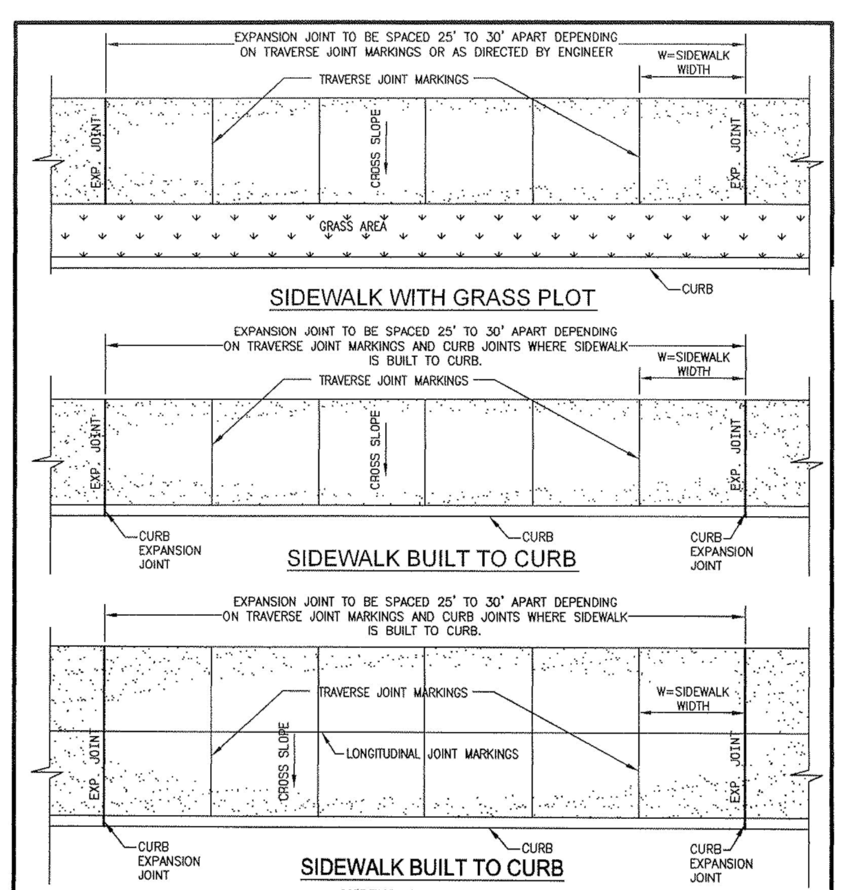

GENERAL NOTE:
1. SIDEWALKS SHALL BE A MINIMUM OF 4" THICK AND MAINTAIN A MINIMUM OF 3 CLEARANCE THROUGH THE PATH OF TRAVEL.
2. MAXIMUM CROSS SLOPE SHALL NOT EXCEED 1:50 (VERTICAL:HORIZONTAL)
3. SIDEWALK SHALL BE CONSTRUCTED OF 4000psi CONCRETE. BROOM FINISH.

REVISION	DATE		
ADDED	6-12-2003	Town Of Nolensville — Telephone (615) 776-3633 FAX (615) 776-3634 — A Great Place To Live	STANDARD CONCRETE SIDEWALK — RW-13 — N.T.S.

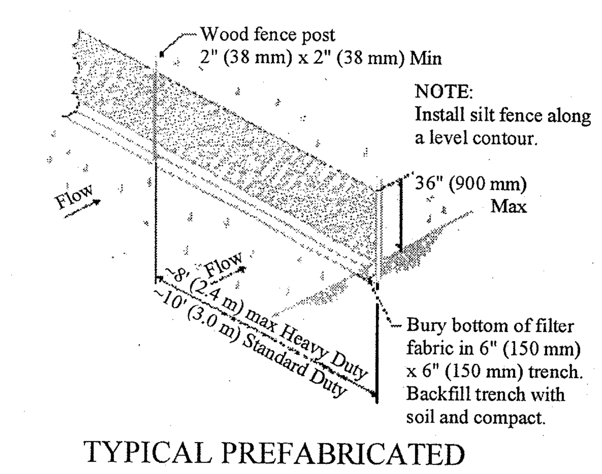

TYPICAL PREFABRICATED SILT FENCE INSTALLATION
N.T.S.

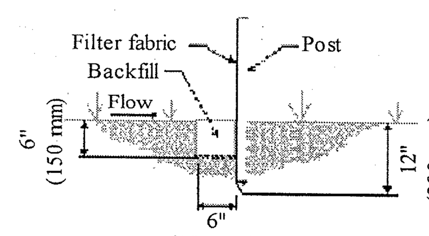

SECTION
N.T.S.

Silt Fence Detail

DETAIL SHEET

REVISIONS:

Yazdian Conststruction Inc.
DEVELOPER

Anderson, Delk, Epps & Associates Inc.
ENGINEERING/PLANNING/SURVEYING
618 GRASSMERE PARK DRIVE / SUITE 4
NASHVILLE, TENNESSEE 37211

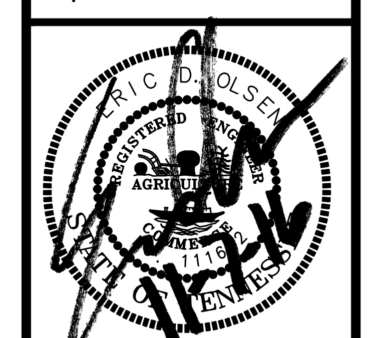

Greenbrook North

NOLENSVILLE, TENNESSEE

DETAIL SHEET

DATE : 11 - 07 - 16

JOB No. 14 - 123

SHEET 1 OF 2

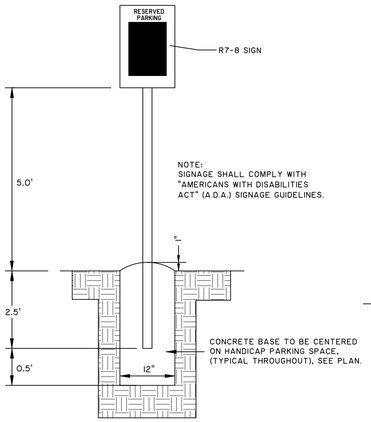

EXTERIOR HANDICAPPED SIGN

N.T.S.

NOTES:

1. WIDTH OF DUMPSTER PAD AND WHEEL PAD SHALL BE 12'.
2. USE 4000 P.S.I. CONCRETE.
3. USE GRADE 60 STEEL.
4. PROVIDE EXPANSION JOINTS WHERE CONCRETE PAD ABUTS RIGID MATERIAL.

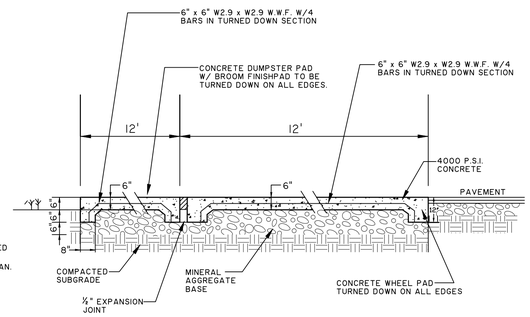

DUMPSTER PAD w/ WHEEL PAD

N.T.S.

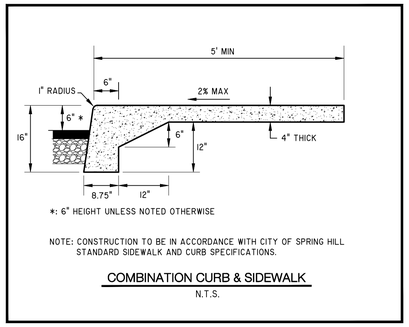

COMBINATION CURB & SIDEWALK

N.T.S.

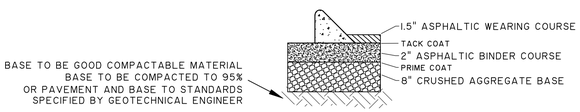

PAVEMENT DETAIL

n.t.s.

NOTE : ALL PAVEMENT THICKNESSES LISTED ARE AT FULL COMPACTION OF MATERIAL

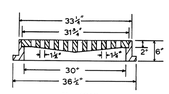

No. 4310

Frame.....345 lbs.
Grate.....330 lbs.
Total.....675 lbs.

Specify for Multiple Units

K-Grate Detail

JOHN BOUCHARD & SONS CO. No 4310 (OR EQUAL)

N.T.S.

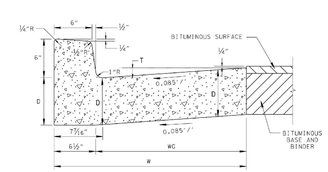

6" CONCRETE COMBINED CURB AND GUTTER

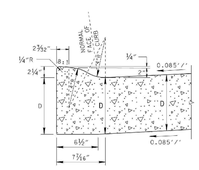

LOWERED CONCRETE CURB

6" CONCRETE COMBINED CURB AND GUTTER TABLE				
TYPE	TOTAL WIDTH (W) IN INCHES	WIDTH OF GUTTER (WG) IN INCHES	VERTICAL DROP (T) IN INCHES	VERTICAL DEPTH (D) OF GUTTER
6-30	30	23½	2	AS NOTED ON TYPICAL X-SECTIONS
6-36	36	29½	2½	
6-42	42	35½	3	

QUANTITIES FOR COMBINED CURB AND GUTTER						
HEIGHT OF CURB	DEPTH (D) OF GUTTER IN INCHES	TOTAL WIDTH (W) IN INCHES	CUBIC YARDS PER LINEAR FOOT	DEPTH (D) OF GUTTER IN INCHES	TOTAL WIDTH (W) IN INCHES	CUBIC YARDS PER LINEAR FOOT
LOWERED CURB	6	30	0.04875	7	30	0.05647
	6	36	0.05804	7	36	0.06730
	6	42	0.06727	7	42	0.07807
6"	6	30	0.05573	7	30	0.06345
	6	36	0.06499	7	36	0.07425
	6	42	0.07425	7	42	0.08505

LOWERED CONCRETE CURB NOTES
(L) TO BE BUILT AS COMBINED CURB AND GUTTER, DETACHED CURB OR INTEGRAL CURB AS NOTED ON THE PLANS OR AS DIRECTED BY THE ENGINEER.
(C) TO BE USED FOR PROPOSED RAMP OPENINGS.

LEGEND
D- VERTICAL DEPTH OF GUTTER
T- VERTICAL DROP IN GUTTER FROM FRONT EDGE TO FACE OF CURB
W- TOTAL WIDTH OF COMBINED CURB AND GUTTER
WG- WIDTH OF GUTTER

GENERAL NOTES

(A) FOR SPECIFICATIONS SEE "STANDARD SPECIFICATIONS FOR ROAD AND BRIDGE CONSTRUCTION" OF THE TENNESSEE DEPARTMENT OF TRANSPORTATION, SECTION 702 - CEMENT CONCRETE CURB, GUTTER AND COMBINED CURB AND GUTTER.

(B) THE FRONT FACE OF THE CONCRETE CURBS FOR ALL DEGREES OF CURVATURE SHALL CONFORM TO THE CONTOUR OF THE CURVE AND NO CHORD SECTIONS WILL BE PERMITTED.

(C) CONCRETE EXPANSION JOINT MATERIAL IS TO BE ¾" PREMOLDED FIBER IN ACCORDANCE WITH SECTION 905 - JOINT MATERIALS OF THE STANDARD SPECIFICATIONS.

(D) EXPANSION JOINTS ARE TO BE PLACED AS FOLLOWS:

1. AT TANGENT POINTS OF CIRCULAR CURBS
2. BETWEEN CURBS AND ABUTTING RIGID OBJECTS
3. AT OTHER PLACES WHERE STRESSES MAY DEVELOP
4. SO AS TO LINE UP WITH PAVEMENT JOINTS WHERE THE ADJACENT PAVEMENT IS CONCRETE
5. MAXIMUM SPACING IS TO BE 100 FEET

(E) CONTRACTION JOINTS ARE TO BE SPACED AT 10 FEET. THE SPACING OF 10 FEET MAY BE REDUCED FOR CLOSURES, BUT NOT LESS THAN 6 FEET.

(F) EDGES OF JOINTS SHALL BE FINISHED ON ONE-QUARTER INCH RADIT.

(G) ALL COST OF JOINTS SHALL BE INCLUDED IN THE UNIT PRICE BID FOR CONCRETE CURBS AND GUTTERS.

(H) THE UNIT PRICE BID FOR CONCRETE CURB AND GUTTER WILL INCLUDE ANY CIRCULAR SECTION REQUIRED TO BE BUILT CONFORMING TO SECTIONS SHOWN ON THIS SHEET.

(I) PAYMENT WILL BE AS FOLLOWS:

ITEM NO. 702-01 CONCRETE CURB PER CUBIC YARD
ITEM NO. 702-02 CONCRETE GUTTER PER CUBIC YARD
ITEM NO. 702-03 CONCRETE COMBINED CURB AND GUTTER PER CUBIC YARD

REV. 11-1-89: REDREW SHEET.

REV. 7-1-72: CHANGED DEPARTMENT NAME.

REV. 11-10-72: CHANGED NOTE REGARDING JOINTS IN CURBS AND GUTTERS.

REV. 1-1-76: CHANGED DRAWING NO. FROM P-C-15(68) TO RP-C-15.

REV. 7-17-81: CHANGED ITEM NUMBERS TO AGREE WITH NEW SPECIFICATION BOOK.

REV. 10-26-93: DREW NEW SHEET INCLUDING INFORMATION PREVIOUSLY DRAWING NO. RP-C-15 REGARDING SIX-INCH NONMOUNTABLE DETACHED CONCRETE CURBS AND SIX-INCH NONMOUNTABLE CONCRETE COMBINED CURB AND GUTTER.

REV. 10-26-93: DREW NEW SHEET INCLUDING INFORMATION PREVIOUSLY ON DRAWING NO. RP-NMC-10 REGARDING SIX-INCH NONMOUNTABLE COMBINED CONCRETE CURB AND GUTTER FOR DEPTH OF ADDED QUANTITIES FOR GUTTER DEPTH OF 6".

REV. 10-26-97: CORRECTED LABELING OF PAVEMENT ON DETAILS.

REV. 2-28-02: CHANGED SHEET NAME. CHANGED REFERENCE TO CURB FROM NONMOUNTABLE TO VERTICAL.

MINOR REVISION - FHWA APPROVAL NOT REQUIRED.

STATE OF TENNESSEE
DEPARTMENT OF TRANSPORTATION

STANDARD VERTICAL (NONMOUNTABLE) CONCRETE CURBS AND CONCRETE CURBS AND GUTTERS

10-26-93 | RP-NMC-11

30" Curb and Gutter Detail

DETAIL SHEET

REVISIONS:

Yazdian Conststruction Inc.
DEVELOPER

Anderson, Delk, Epps & Associates Inc.
ENGINEERING/PLANNING/SURVEYING
618 GRASSMERE PARK DRIVE / SUITE 4
NASHVILLE, TENNESSEE 37211

R. C. D. OLSEN
REGISTERED ENGINEER
AGRICULTURE
CIVIL
STATE OF TENNESSEE

Greenbrook North

NOLENSVILLE, TENNESSEE

DETAIL SHEET

DATE : 11 - 07 - 16

JOB No. 14 - 123

SHEET 2 OF 2

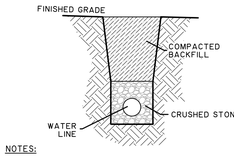

NOTES:

1) 3 FT MINIMUM DEPTH OF BURY.
2) WHERE ROCK IS ENCOUNTERED THE TRENCH SHALL BE EXCAVATED TO A DEPTH OF SIX INCHES BELOW BOTTOM OF PIPE TO PROVIDE SPACE FOR 6" OF CRUSHED STONE BEDDING.
3) MINIMUM TRENCH WIDTH SHALL BE THE PIPE DIAMETER PLUS 18".
4) CRUSHED STONE SHALL BE PLACED IN THE TRENCH FOR A DEPTH NO LESS THAN 6" BELOW AND 12" ABOVE THE PIPE.
5) CRUSHED STONE SHALL BE SIZED 1/4 INCH TO 3/4 INCH AS SET OUT IN STANDARDS SPECIFICATIONS OF TDOT.

WATER LINE TRENCH DETAIL
n.t.s.

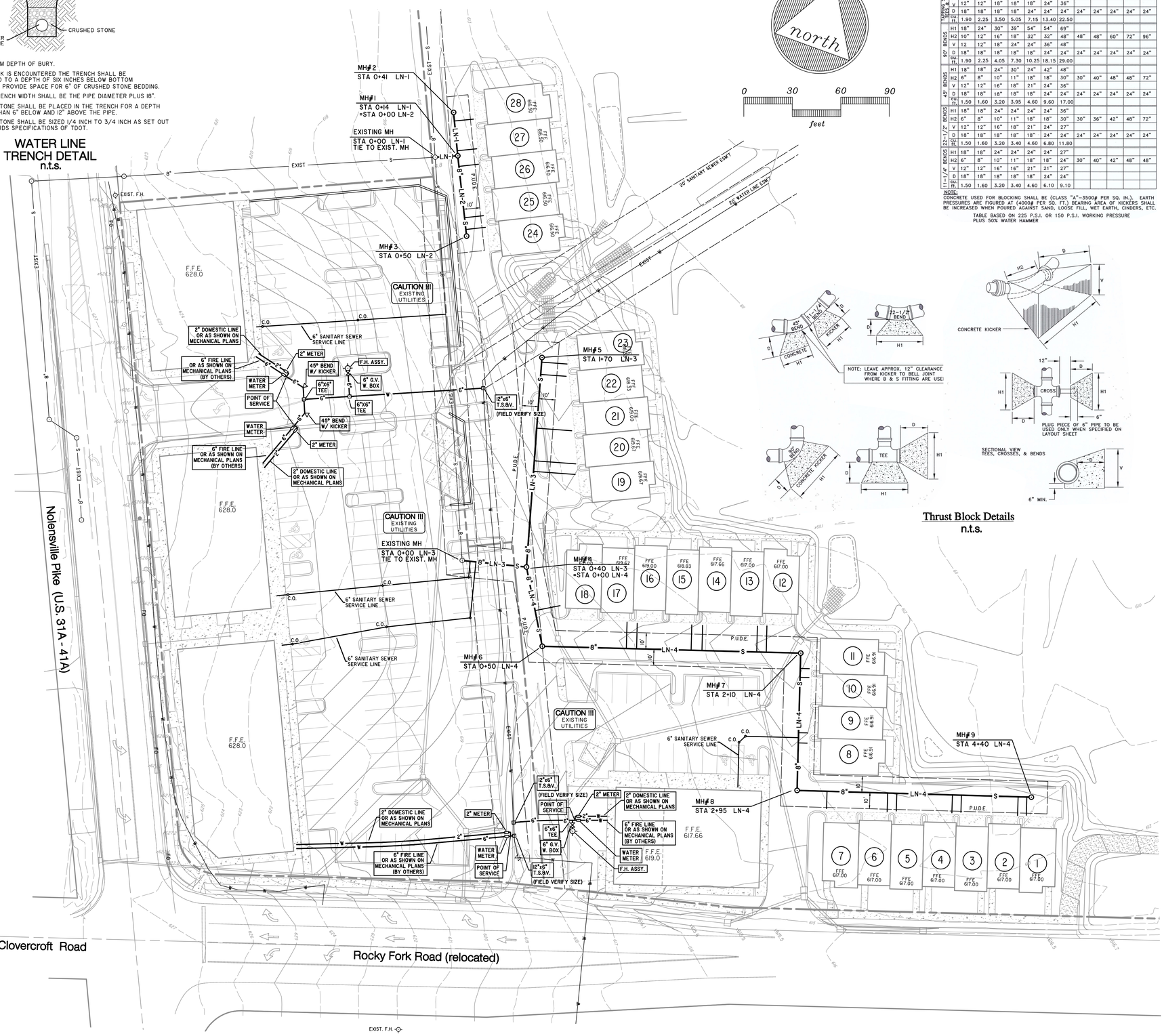

TABLE OF DIMENSIONS FOR CONCRETE KICKERS

SIZE OF PIPE (in.)		2" & 2-1/4"	3" & 4"	6"	8"	10"	12"	16"	18"	20"	24"	30"	36"
11-1/4° BENDS	H1	18"	24"	24"	24"	36"	48"	54"	66"				
	H2	10"	12"	16"	18"	24"	30"	34"	36"	38"	42"	52"	58"
	V	12"	12"	18"	18"	18"	24"	36"					
	D	18"	18"	18"	18"	24"	24"	24"	24"	24"	24"	24"	24"
	CU. FT.	1.90	2.25	3.50	5.05	7.15	13.40	22.50					
22-1/2° BENDS	H1	18"	24"	30"	39"	54"	54"	69"					
	H2	10"	12"	16"	18"	32"	32"	48"	48"	48"	60"	72"	96"
	V	12"	12"	18"	24"	24"	36"	48"					
	D	18"	18"	18"	18"	18"	24"	24"	24"	24"	24"	24"	24"
	CU. FT.	1.90	2.25	4.05	7.30	10.25	18.15	29.00					
45° BENDS	H1	18"	18"	24"	30"	24"	42"	48"					
	H2	6"	8"	10"	11"	18"	18"	30"	30"	40"	48"	48"	72"
	V	12"	12"	16"	18"	21"	24"	36"					
	D	18"	18"	18"	18"	18"	24"	24"	24"	24"	24"	24"	24"
	CU. FT.	1.50	1.60	3.20	3.95	4.60	9.60	17.00					
22-1/2° BENDS	H1	18"	18"	24"	24"	24"	24"	36"					
	H2	6"	8"	10"	11"	18"	18"	30"	30"	36"	42"	48"	72"
	V	12"	12"	16"	18"	21"	24"	27"					
	D	18"	18"	18"	18"	18"	24"	24"	24"	24"	24"	24"	24"
	CU. FT.	1.50	1.60	3.20	3.40	4.60	6.80	11.80					
11-1/4° BENDS	H1	18"	18"	24"	24"	24"	24"	27"					
	H2	6"	8"	10"	11"	18"	18"	24"	30"	40"	42"	48"	48"
	V	12"	12"	16"	16"	21"	21"	27"					
	D	18"	18"	18"	18"	18"	24"	24"					
	CU. FT.	1.50	1.60	3.20	3.40	4.60	6.10	9.10					

NOTE:
CONCRETE USED FOR BLOCKING SHALL BE (CLASS "A"-3500# PER SQ. IN.). EARTH PRESSURES ARE FIGURED AT (4000# PER SQ. FT.) BEARING AREA OF KICKERS SHALL BE INCREASED WHEN POURED AGAINST SAND, LOOSE FILL, WET EARTH, CINDERS, ETC.

TABLE BASED ON 225 P.S.I. OR 150 P.S.I. WORKING PRESSURE PLUS 50% WATER HAMMER

Thrust Block Details
n.t.s.

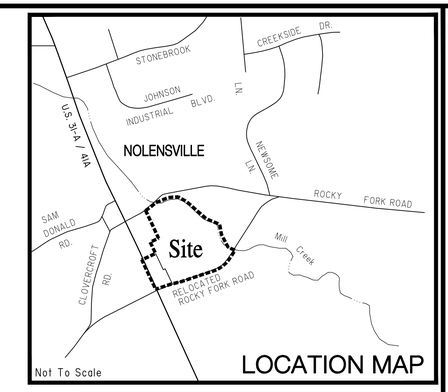

LOCATION MAP

Notes:

1. PROPERTY IS LOCATED ON PROPERTY MAP 56M, GROUP "A", PARCELS 32.00 & 33.00, MAP 56, PARCEL 117.01, AND MAP 59, PARCEL 43.00
2. ALL MANHOLES TO BE CENTERED IN THE ROAD OR CENTERED IN THE TRAVEL LANE.
3. A 6" SEWER SERVICE SHALL BE PROVIDED FOR EACH UNIT.
4. PVC MAY BE USED AS SEWER PIPE MATERIAL ON THIS PROJECT, CLASS 35, UNLESS NOTED OTHERWISE.
5. A DISTANCE OF 10 ft. SHALL BE MAINTAINED BETWEEN PROPOSED WATER LINE & PROPOSED SEWER LINE; THIS MAY REQUIRE THE CONTRACTOR TO MAKE ADJUSTMENTS IN THE FIELD.
6. WATER SERVICE PROVIDED NOLENSVILLE/COLLAGE GROVE UTILITY DISTRICT. SEE PLANS BY OTHERS FOR PROPOSED WATER MAIN DESIGN AND WATER SERVICES TO RESIDENTIAL UNITS.
7. CONTRACTOR SHALL BE RESPONSIBLE FOR THE LOCATION, IN THE FIELD, OF ALL EXISTING UTILITIES BEFORE THE START OF CONSTRUCTION. HE SHALL DETERMINE THE EXACT LOCATION OF ALL EXISTING UTILITIES BEFORE COMMENCING WORK IN EACH AREA. HE AGREES TO BE FULLY RESPONSIBLE FOR ANY AND ALL DAMAGES WHICH MIGHT BE OCCASIONED BY HIS FAILURE TO EXACTLY LOCATE AND PRESERVE ANY AND ALL UNDERGROUND UTILITIES.
8. PROPOSED MANHOLES TO HAVE A MINIMUM DEPTH OF 4 FEET.
9. SANITARY SEWER PIPE WILL HAVE A MINIMUM COVER OF 4 FEET BENEATH PAVEMENT, AND 30 INCHES UNPAVED.
10. SUFFICIENT PRECAUTIONS SHALL BE TAKEN DURING CONSTRUCTION TO MINIMIZE THE RUNOFF OF POLLUTING SUBSTANCES INTO THE SURFACE WATERS OF THE STATE. SPECIAL PRECAUTIONS SHALL BE TAKEN IN THE USE OF CONSTRUCTION EQUIPMENT TO PREVENT OPERATIONS WHICH PROMOTE EROSION.
11. WHERE IN EASEMENT OR RIGHT-OF-WAY THE CONTRACTOR SHALL PROTECT AND RESTORE SAID PROPERTY TO A CONDITION EQUAL TO THAT EXISTING AT THE START OF CONSTRUCTION.
12. THE CONTRACTOR SHALL RESTORE ALL DRIVEWAYS, CULVERTS, FENCES, WALLS, SMALL ORNAMENTAL TREES, CULTIVATED SHRUBS, FLOWERS, SIGNS, LIGHT AND POWER POLES, STREET MARKERS, MAIL BOXES, WATER AND GAS LINES, WATER AND GAS METERS AND BOXES, LAWNS, AND FIELDS DISTURBED BY CONSTRUCTION OPERATIONS TO THEIR ORIGINAL CONDITIONS. THE COST OF THIS WORK SHALL BE MERGED IN THE UNIT BID AND CONTRACT PRICE FOR THE PROPOSED SEWER LINE.

MWS Standard Plan Notes:

1. ALL SEWER CONSTRUCTION SHALL BE IN ACCORDANCE WITH THE SPECIFICATIONS AND STANDARD DETAILS OF METRO WATER SERVICES.
2. THE CONTRACTOR IS RESPONSIBLE FOR REIMBURSING THE METRO WATER SERVICES THE COST OF INSPECTION.
3. THE CONTRACTOR IS TO PROVIDE AND MAINTAIN THE CONSTRUCTION IDENTIFICATION SIGN FOR PRIVATE DEVELOPMENT APPROVED.
4. AFTER COMPLETION OF THE SANITARY SEWER, THE CONTRACTOR IS RESPONSIBLE FOR THE TELEVISING OF THE LINES. THE VIDEOTAPING MUST BE COORDINATED WITH THE METRO WATER SERVICES INSPECTION SECTION. ALL COSTS TO BE BORNE BY THE THE CONTRACTOR. THE DEVELOPER IS RESPONSIBLE FOR ENSURING THIS WORK HAS BEEN COMPLETED PRIOR TO FINAL ACCEPTANCE.
5. ALL CONNECTIONS TO EXISTING MANHOLES SHALL BE MADE BY CORING AND RESILIENT CONNECTOR METHODS.
6. UPON COMPLETION OF CONSTRUCTION OF WATER AND/OR SEWER, THE ENGINEER SHALL PROVIDE THE DEPARTMENT WITH A COMPLETE SET OF AS-BUILT PLANS ON MOIST ERASABLE MYLARS IN REVERSE AND IN DIGITAL (*.DWG) FORMAT. SEWER PLANS SHALL BE SEALED BY A LICENSED PROFESSIONAL ENGINEER OR A REGISTERED LAND SURVEYOR AND SHALL INCLUDE ACTUAL FIELD ANGLES BETWEEN LINES, ALL ACTUAL SERVICE LINES AND TEE LOCATIONS, THE DISTANCE OF THE END OF THE SERVICE LINE TO PROPERTY CORNERS AND LINES AND/OR STATION AND OFFSET FROM SEWER CENTERLINE TO END OF SERVICE LINE, THE DEPTH TO TOP OF THE END OF THE SERVICE LINE, AND SHALL REFLECT ALL ALIGNMENT AND GRADE CHANGES. WATER LINE PLANS SHALL BE SEALED BY A LICENSED ENGINEER OR REGISTERED LAND SURVEYOR AND SHALL INCLUDE OFFSET DISTANCE FROM THE ROADWAY CENTERLINE, OR PROPERTY LINE RIGHT OF WAY, LINE DEPTH, LOCATIONS OF HYDRANTS, VALVES, REDUCERS, TEES AND PRESSURE REDUCING DEVICES WHERE APPLICABLE. ALL DRAWINGS MUST BE COMPLETED AND SUBMITTED PRIOR TO ACCEPTANCE OF THE SEWERS OR WATER MAINS INTO THE PUBLIC SYSTEM AND ANY CONNECTIONS BEING MADE THERETO.

Water Notes

1. CONTRACTOR SHALL BE RESPONSIBLE FOR OBTAINING & PAYING FOR ALL PERMITS ASSOCIATED WITH THIS CONSTRUCTION, INCLUDING BUT NOT LIMITED TO PAYMENT FOR INSPECTION.
2. ALL WATER LINE CONSTRUCTION SHALL BE IN ACCORDANCE WITH THE CURRENT STANDARDS, SPECIFICATIONS AND DETAILS OF THE NOLENSVILLE/COLLEGE GROVE UTILITY DISTRICT
3. CONTRACTOR SHALL BE RESPONSIBLE FOR THE LOCATION, IN THE FIELD, OF ALL EXISTING UTILITIES BEFORE THE START OF CONSTRUCTION. HE SHALL DETERMINE THE EXACT LOCATION OF ALL EXISTING UTILITIES BEFORE COMMENCING WORK IN EACH AREA. HE AGREES TO BE FULLY RESPONSIBLE FOR ANY AND ALL DAMAGES WHICH MIGHT BE OCCASIONED BY HIS FAILURE TO EXACTLY LOCATE AND PRESERVE ANY AND ALL UNDERGROUND UTILITIES.
4. SEE MECHANICAL PLANS FOR SERVICE LINE CONNECTIONS TO PROPOSED BUILDING.
5. INSTALATION OF FIRE SUPPLY LINES FROM "POINT OF SERVICE" SHALL BE DONE BY A TENNESSEE REGISTERED SPRINKLER CONTRACTOR.
6. BACK FLOW PREVENTOR TO BE INSTALLED AS PER NCGUD STANDARDS. CONTRACTOR TO CONTACT THE UTILITY DISTRICT TO VERIFY SIZE, TYPE, AND LOCATION.
7. WATER SERVICE CONNECTIONS, WATER METER LOCATIONS, BACKFLOW PREVENTOR LOCATIONS, ETC. TO BE COORDINATED FOR ALL WATER SERVICE LINE INSTALLATION (DOMESTIC, SPRINKLER, LANDSCAPING, ETC.)
8. WATER SERVICE PROVIDED NOLENSVILLE/COLLAGE GROVE UTILITY DISTRICT. SEE PLANS BY OTHERS FOR PROPOSED WATER MAIN DESIGN AND WATER SERVICES TO RESIDENTIAL UNITS.

UTILITY PLAN

REVISIONS: 11-28-16 AS PER TOWN OF NOLENSVILLE

Yazdian Constsruction Inc.
DEVELOPER

Anderson, Delk, Epps & Associates Inc.
ENGINEERING/PLANNING/SURVEYING
618 GRASSMERE PARK DRIVE / SUITE 4
NASHVILLE, TENNESSEE 37211

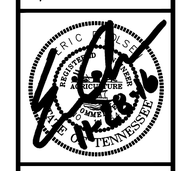

Greenbrook North
NOLENSVILLE, TENNESSEE

UTILITY PLAN

DATE : 11 - 07 - 16

JOB No. 14 - 123

SHEET 1 OF 1

METRO PROJECT NO.
_____ (SEWER)

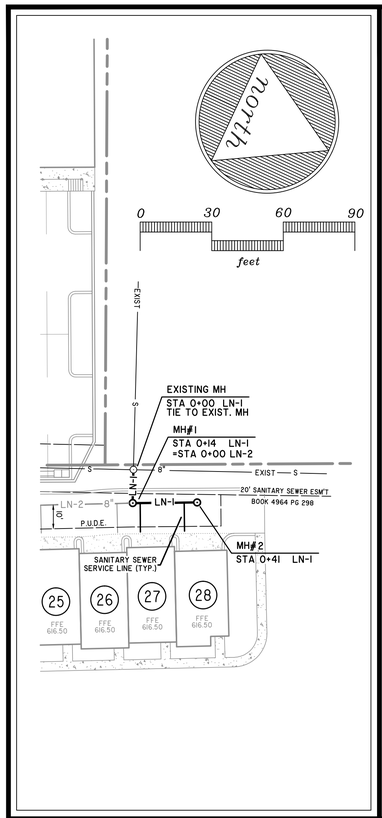

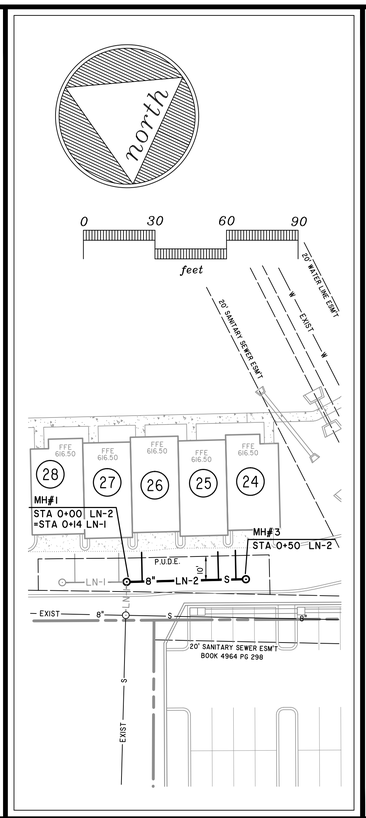

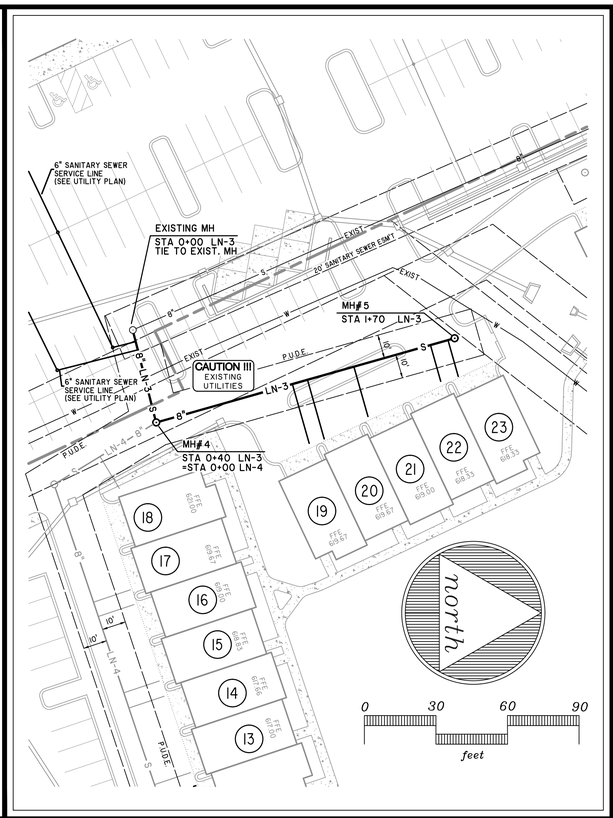

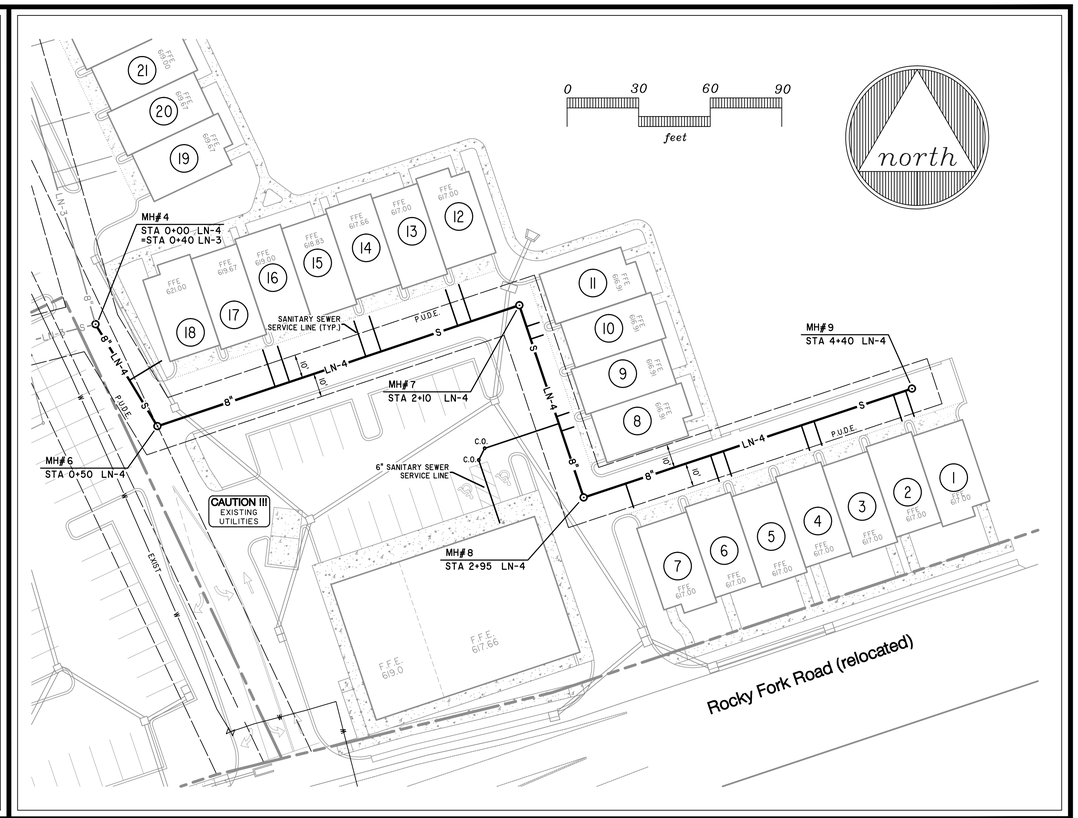

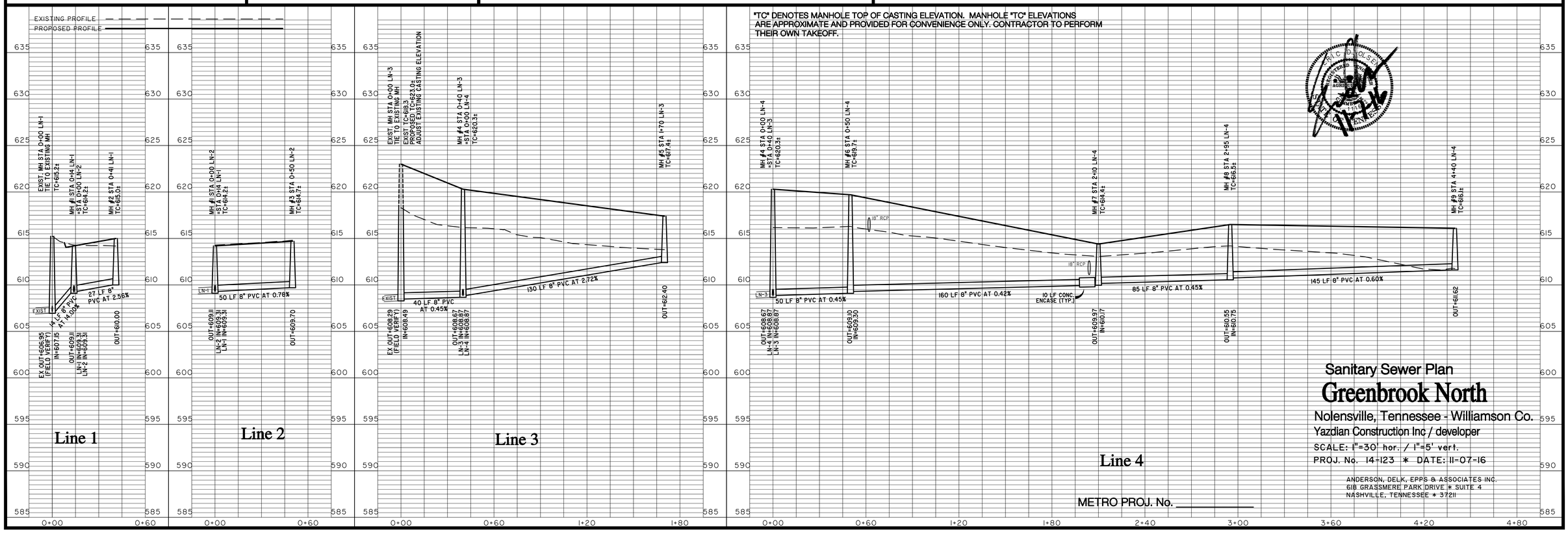

Sanitary Sewer Plan

Greenbrook North

Nolensville, Tennessee - Williamson Co.

Yazdian Construction Inc / developer

SCALE: 1"=30' hor. / 1"=5' vert.

PROJ. No. 14-123 * DATE: 11-07-16

ANDERSON, DELK, EPPS & ASSOCIATES INC.
618 GRASSMERE PARK DRIVE * SUITE 4
NASHVILLE, TENNESSEE * 37211

METRO PROJ. No. _____

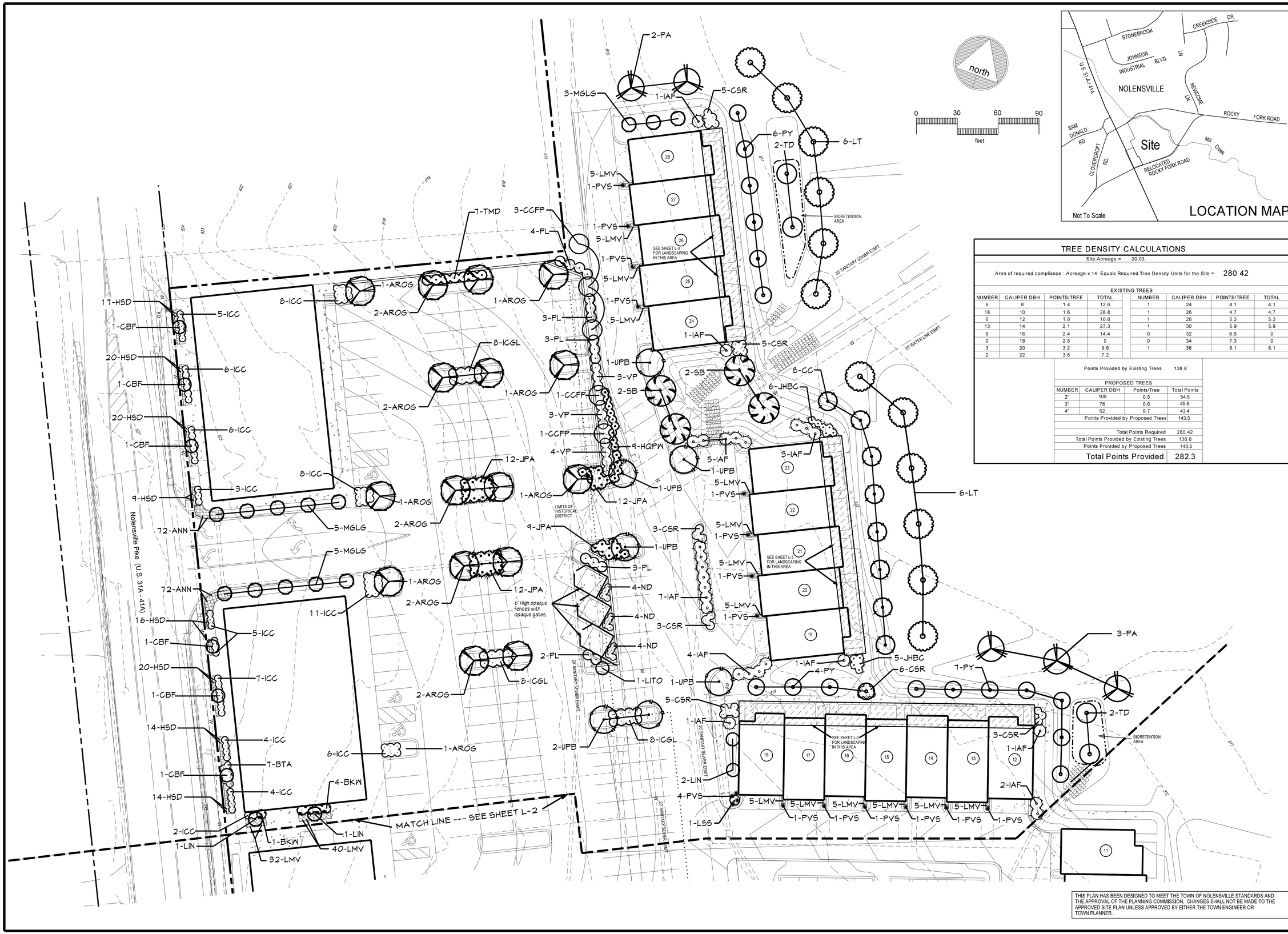

TREE DENSITY CALCULATIONS

Site Acreage = 20.03

Area of required compliance : Acreage x 14 Equals Required Tree Density Units for the Site = 280.42

EXISTING TREES

NUMBER	CALIPER DBH	POINTS/TREE	TOTAL	NUMBER	CALIPER DBH	POINTS/TREE	TOTAL
9	8	1.4	12.6	1	24	4.1	4.1
18	10	1.6	28.8	1	26	4.7	4.7
6	12	1.8	10.8	1	28	5.3	5.3
13	14	2.1	27.3	1	30	5.9	5.9
6	16	2.4	14.4	0	32	6.6	0
0	18	2.8	0	0	34	7.3	0
3	20	3.2	9.6	1	36	8.1	8.1
2	22	3.6	7.2				

Points Provided by Existing Trees 138.8

PROPOSED TREES

NUMBER	CALIPER DBH	Points/Tree	Total Points
2"	109	0.5	54.5
3"	76	0.6	45.6
4"	62	0.7	43.4
Points Provided by Proposed Trees			143.5

Total Points Required	280.42
Total Points Provided by Existing Trees	138.8
Points Provided by Proposed Trees	143.5
Total Points Provided	282.3

THIS PLAN HAS BEEN DESIGNED TO MEET THE TOWN OF NOLENSVILLE STANDARDS AND THE APPROVAL OF THE PLANNING COMMISSION. CHANGES SHALL NOT BE MADE TO THE APPROVED SITE PLAN UNLESS APPROVED BY EITHER THE TOWN ENGINEER OR TOWN PLANNER.

LANDSCAPE PLANTING PLAN

REVISIONS:

Yazdian Conststruction Inc.
DEVELOPER

Anderson, Delk, Epps & Associates Inc.
ENGINEERING/PLANNING/SURVEYING
618 GRASSMERE PARK DRIVE / SUITE 4
NASHVILLE, TENNESSEE 37211

APPROVED N. LINKENHOKER PE 0 STATE OF TENNESSEE

Greenbrook North

NOLENSVILLE, TENNESSEE

LANDSCAPE PLANTING PLAN

DATE : 11 - 07 - 16

Job Numbers:
14-123 & 116071089

L-1 Sheet 1 of 5

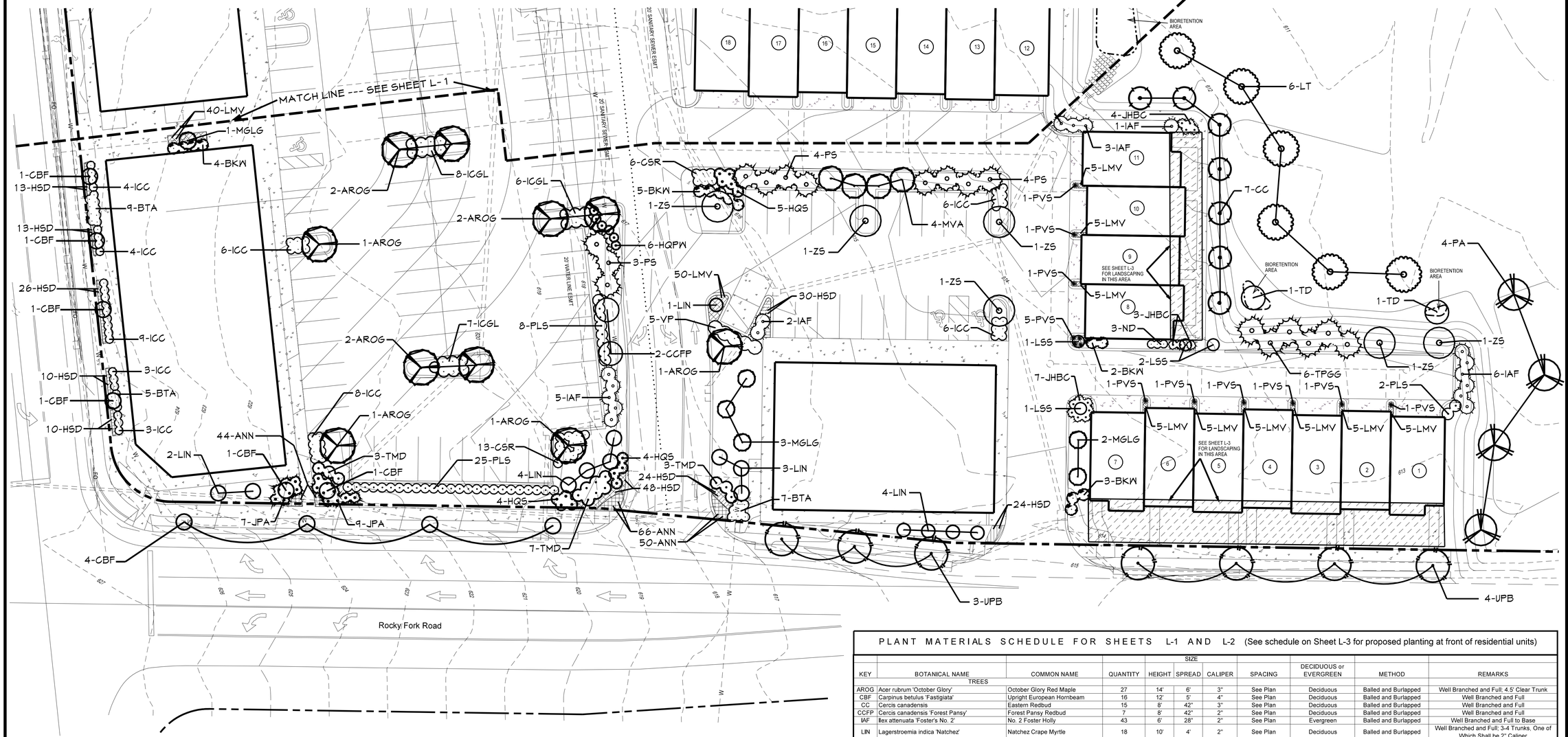

PLANT MATERIALS SCHEDULE FOR SHEETS L-1 AND L-2 (See schedule on Sheet L-3 for proposed planting at front of residential units)

KEY	BOTANICAL NAME	COMMON NAME	QUANTITY	SIZE HEIGHT	SIZE SPREAD	SIZE CALIPER	SPACING	DECIDUOUS or EVERGREEN	METHOD	REMARKS
	TREES									
AROG	Acer rubrum 'October Glory'	October Glory Red Maple	27	14'	6'	3"	See Plan	Deciduous	Balled and Burlapped	Well Branched and Full: 4.5' Clear Trunk
CBF	Carpinus betulus 'Fastigiata'	Upright European Hornbeam	16	12'	5'	4"	See Plan	Deciduous	Balled and Burlapped	Well Branched and Full
CC	Cercis canadensis	Eastern Redbud	15	8'	42"	3"	See Plan	Deciduous	Balled and Burlapped	Well Branched and Full
CCFP	Cercis canadensis 'Forest Pansy'	Forest Pansy Redbud	7	8'	42"	2"	See Plan	Deciduous	Balled and Burlapped	Well Branched and Full
IAF	Ilex attenuata 'Foster's No. 2'	No. 2 Foster Holly	43	6'	28"	2"	See Plan	Evergreen	Balled and Burlapped	Well Branched and Full to Base
LIN	Lagerstroemia indica 'Natchez'	Natchez Crape Myrtle	18	10'	4'	2"	See Plan	Deciduous	Balled and Burlapped	Well Branched and Full; 3-4 Trunks, One of Which Shall be 2" Caliper
LITO	Lagerstroemia indica 'Tonto'	Tonto Crape Myrtle	1	6'	24"	1"	See Plan	Deciduous	Balled and Burlapped	Well Branched and Full: 4 Trunks
LSS	Liquidambar 'Slender Silhouette'	Slender silhouette Sweetgum	5	12'	2'	3"		Deciduous		Well Branched and Full
LT	Liriodendron tulipifera	Tuliptree	18	16'	7'	4"	See Plan	Deciduous	Balled and Burlapped	Well Branched and Full
MGLG	Magnolia grandiflora 'Little Gem'	Little Gem Magnolia	19	8'	36"	2"	See Plan	Evergreen	Balled and Burlapped	Well Branched and Full to Base
MVA	Magnolia virginiana	Sweetbay Magnolia	4	8'	4'	2"	See Plan	Evergreen	Balled and Burlapped	Well Branched and Full; 3-4 Trunks, One of Which Shall be 2" Caliper
PA	Platanus acerifolia	London Plane-tree	9	14'	6'	3"	See Plan	Deciduous	Balled and Burlapped	Well Branched and Full
PS	Pinus strobus	White Pine	11	8'	32"	4"	9'	Evergreen	Balled and Burlapped	Well Branched and Full to Base
PY	Prunus x yedoensis	Yoshino Cherry	17	10'	4'	4"	See Plan	Deciduous	Balled and Burlapped	Well Branched and Full
SB	Salix babylonica	Weeping Willow	4	12'	5'	2"	See Plan	Deciduous	Balled and Burlapped	Well Branched and Full
TD	Taxiodum distichum	Common Bald Cypress	6	12'	4'	2"	See Plan	Deciduous	Balled and Burlapped	Well Branched and Full
TPGG	Thuja plicata 'Green Giant'	Green Giant Arborvitae	6	7'	32"	2"	9'	Evergreen	Balled and Burlapped	Well Branched and Full to Base
UPB	Ulmus parvifolia 'Bosque'	Bosque Chinese Elm	14	14'	6'	3"	See Plan	Deciduous	Balled and Burlapped	Well Branched and Full: 4.5' Clear Trunk
ZS	Zelkova serrata 'Green Vase	Green Vase Zelkova	6	12'	6'	3"	See Plan	Deciduous	Balled and Burlapped	Well Branched and Full: 4.5' Clear Trunk
	SHRUBS									
BGM	Buxus x 'Green Mountain'	Green Mountain Boxwood	0	28"	22"	N/A	See Plan	Evergreen	Balled and Burlapped	Well Branched and Full
BKW	Buxus koreana 'Wintergreen'	Wintergreen Boxwood	19	18"	20"	N/A	4'	Evergreen	5 Gallon Container	Well Branched and Full
BSM	Buxus sempervirens 'Monnue'	Green Tower Boxwood	0	36"	12"	N/A	See Plan	Evergreen	7 Gallon Container	Well Branched and Full
BTA	Berberis thunbergi 'Atropurpurea Nana'	Dwarf Purpleleaf Barberry	28	10"	18"	N/A	30"	Deciduous	5 Gallon Container	Well Branched and Full
HQS	Hydrangea quercifolia 'Snowflake'	Snowflake Oakleaf Hydrangea	13	24"	18"	N/A	4'	Deciduous	5 Gallon Container	Well Branched and Full
HQPW	Hydrangea quercifolia 'Pee Wee'	Pee Wee Hydrangea	15	20"	16"	N/A	3.5'	Deciduous	5 Gallon Container	Well Branched and Full
ICC	Ilex cornuta 'Carissa'	Carissa Holly	125	20"	20"	N/A	3.5'	Evergreen	5 Gallon Container	Well Branched and Full
ICGL	Ilex crenata 'Green Lustre'	Green Lustre Japanese Holly	45	15"	20"	N/A	4'	Evergreen	5 Gallon Container	Well Branched and Full
ICSP	Ilex crenata 'Sky Pencil'	Sky Pencil Holly	0	30"	8"	N/A	18"	Evergreen	5 Gallon Container	Well Branched and Full
JCNC	Juniperus chinensis 'Nick's Compact'	Nick's Compact Juniper	0	20"	20"	N/A	4'	Evergreen	5 Gallon Container	Well Branched and Full
JPA	Juniperus x pfitzeriana 'Aurea Improved'	Gold Coast Juniper	61	10"	24"	N/A	4'	Evergreen	5 Gallon Container	Well Branched and Full
ND	Nandina domestica	Nandina	15	36"	18"	N/A	30"	Evergreen	5 Gallon Container	Well Branched and Full
PJM	Pieris japonica 'Mountain Fire'	Mountain Fire Pieris	0	18"	15"	N/A	30"	Evergreen	6 Gallon Container	Well Branched and Full
PL	Prunus laurocerasus	English Laurel	15	36"	20"	N/A	4.5'	Evergreen	Balled and Burlapped	Well Branched and Full
PLO	Prunus laurocerasus 'Otto Luyken'	Otto Luyken English Laurel	0	20"	24"	N/A	4'	Evergreen	5 Gallon Container	Well Branched and Full
PLS	Prunus laurocerasus 'Schipkaensis'	Schipk Cherry Laurel	35	20"	24"	N/A	4'	Evergreen	5 Gallon Container	Well Branched and Full
TMD	Taxus media 'Densiformis'	Dense Yew	20	18"	20"	N/A	4.5'	Evergreen	Balled and Burlapped	Well Branched and Full
TOGG	Thuja occidentalis 'Golden Globe'	Golden Globe Arborvitae	0	20"	20"	N/A	3'	Evergreen	5 Gallon Container	Well Branched and Full
VP	Viburnum x 'Pragense'	Prague Viburnum	15	36"	20"	N/A	4.5	Evergreen	Balled and Burlapped	Well Branched and Full
			0							
GROUND COVERS, FLOWERS, PERENNIALS AND ORNAMENTAL GRASSES										
ANN1	Viola x Wittrockiana' or Begonia semperflorens 'Gin'	Annuals, Yellow and Purple Pansy or Gin Wax Begonia	304	6"	4"	N/A	10"	Deciduous	4" Pot	Plant Pansies in Fall/Winter or Plant Begonias in Spring/Summer
CSR	Cotoneaster salicifolius 'Repens Willowleaf'	Willowleaf Cotoneaster	49	6"	18"	N/A	3.5'	Evergreen	5 Gallon Container	Well Branched and Full
JHBC	Juniperus Horizontalis 'Blue Chip'	Blue Chip Juniper	25	6"	18"	N/A	3.5'	Evergreen	3 Gallon Container	Well Branched and Full
HMPP	Heuchera micrantha 'Palace Purple	Palace Purple Coral Bells	0	6"	6"	N/A	12"	Deciduous	1 Gallon Container	Very Full
HSD	Hemerocallis 'Stella D'Oro'	Stella D'Oro Daylily	328	14"	12"	N/A	18"	Deciduous	1 Gallon Container	Minimum 8 Fans per Container
LMV	Liriope muscari 'Variegata'	Variegated Liriope	277	8"	8"	N/A	15"	Deciduous	4" Pot	Minimum 5 Pips per Pot
PVS	Panicum virgatum 'Shenandoah'	Shenandoah Switch Grass	32	18"	12"	N/A	3'	Deciduous	1 Gallon Container	Very Full

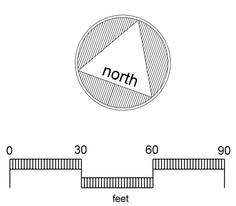

THIS PLAN HAS BEEN DESIGNED TO MEET THE TOWN OF NOLENSVILLE STANDARDS AND THE APPROVAL OF THE PLANNING COMMISSION. CHANGES SHALL NOT BE MADE TO THE APPROVED SITE PLAN UNLESS APPROVED BY EITHER THE TOWN ENGINEER OR TOWN PLANNER.

LANDSCAPE PLANTING PLAN

REVISIONS:

Yazdian Conststruction Inc.
DEVELOPER

Anderson, Delk, Epps & Associates Inc.
ENGINEERING/PLANNING/SURVEYING
618 GRASSMERE PARK DRIVE / SUITE 4
NASHVILLE, TENNESSEE 37211

Greenbrook North

NOLENSVILLE, TENNESSEE

LANDSCAPE PLANTING PLAN

DATE : 11 - 07 - 16

Job Numbers:
14-123 & 116071089

L-2 Sheet 2 of 5

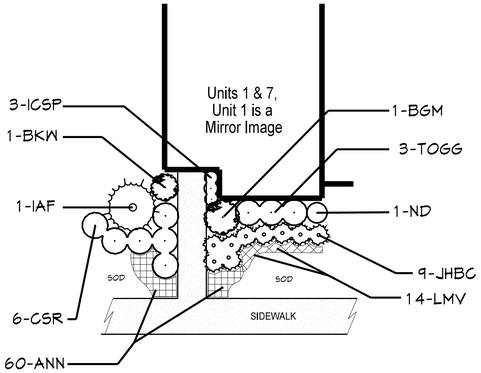

TYPICAL PLANTING "A"
AT UNITS 1 & 7

SCALE: 1" = 10'

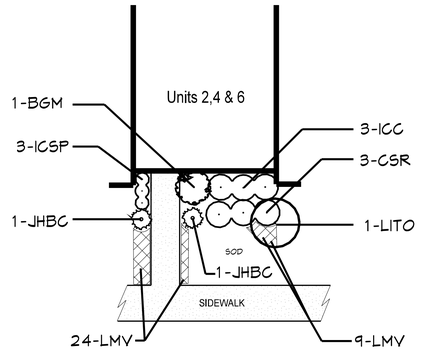

TYPICAL PLANTING "B"
AT UNITS 2, 4 & 6

SCALE: 1" = 10'

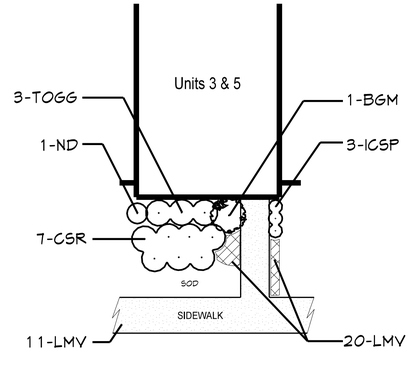

TYPICAL PLANTING "C"
AT UNITS 3 & 5

SCALE: 1" = 10'

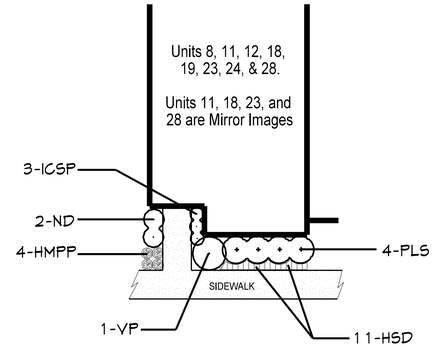

TYPICAL PLANTING "D"
AT UNITS 8, 11, 12, 18, 19, 23, 24, & 28

SCALE: 1" = 10'

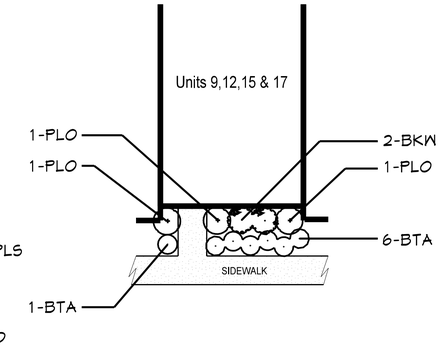

TYPICAL PLANTING "E"
AT UNITS 9, 13, 15 & 17

SCALE: 1" = 10'

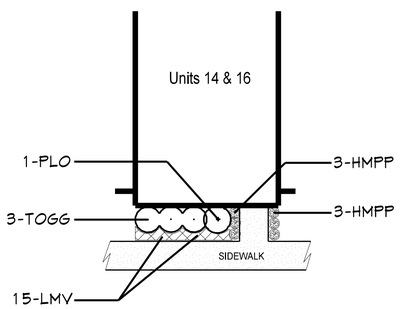

TYPICAL PLANTING "F"
AT UNITS 14 & 16

SCALE: 1" = 10'

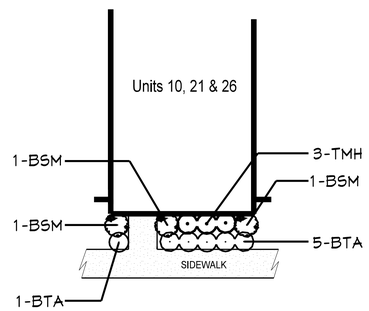

TYPICAL PLANTING "G"
AT UNITS 10, 21 & 26

SCALE: 1" = 10'

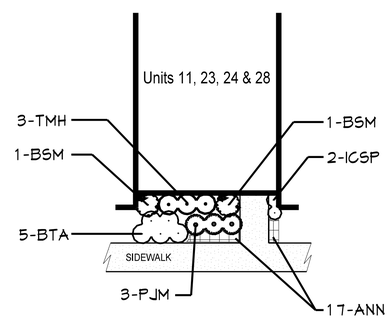

TYPICAL PLANTING "H"
AT UNITS 20, 22, 25 & 27

SCALE: 1" = 10'

PLANT MATERIALS SCHEDULE FOR TYPICAL PLANTING AT RESIDENTIAL UNITS (Sheet L-3 Only)

KEY	BOTANICAL NAME	COMMON NAME	QUANTITY	SIZE HEIGHT	SIZE SPREAD	SIZE CALIPER	SPACING	DECIDUOUS or EVERGREEN	METHOD	REMARKS
	TREES									
IAF	Ilex attenuata 'Foster's No. 2'	No. 2 Foster Holly	2	6'	28"	2"	See Plan	Evergreen	Balled and Burlapped	Well Branched and Full to Base
LITO	Lagerstroemia indica 'Tonto'	Tonto Crape Myrtle	3	6'	24"	1"	See Plan	Deciduous	Balled and Burlapped	Well Branched and Full; 4 Trunks
	SHRUBS									
BGM	Buxus x 'Green Mountain'	Green Mountain Boxwood	7	28"	22"	N/A	See Plan	Evergreen	Balled and Burlapped	Well Branched and Full
BKW	Buxus koreana 'Wintergreen'	Wintergreen Boxwood	10	15"	18"	N/A	3'	Evergreen	5 Gallon Container	Well Branched and Full
BSM	Buxus sempervirens 'Monrue'	Green Tower Boxwood	17	36"	12"	N/A	See Plan	Evergreen	7 Gallon Container	Well Branched and Full
BTA	Berberis thunbergi 'Atropurpurea Nana'	Dwarf Purpleleaf Barberry	66	10"	18"	N/A	30"	Deciduous	5 Gallon Container	Well Branched and Full
ICC	Ilex cornuta 'Carissa'	Carissa Holly	9	20"	20"	N/A	3'	Evergreen	5 Gallon Container	Well Branched and Full
ICSP	Ilex crenata 'Sky Pencil'	Sky Pencil Holly	53	30"	8"	N/A	18"	Evergreen	5 Gallon Container	Well Branched and Full
ND	Nandina domestica	Nandina	20	36"	18"	N/A	See Plan	Evergreen	5 Gallon Container	Well Branched and Full
PJM	Pieris japonica 'Mountain Fire'	Mountain Fire Pieris	12	18"	15"	N/A	30"	Evergreen	6 Gallon Container	Well Branched and Full
PLO	Prunus laurocerasus 'Otto Luyken'	Otto Luyken English Laurel	14	20"	24"	N/A	See Plan	Evergreen	5 Gallon Container	Well Branched and Full
PLS	Prunus laurocerasus 'Schipkaensis'	Schipk Cherry Laurel	32	20"	24"	N/A	4'	Evergreen	5 Gallon Container	Well Branched and Full
TMH	Taxus media 'Hicksi'	Hicks Yew	21	36"	15"	N/A	30"	Evergreen	Balled and Burlapped	Well Branched and Full
TOGG	Thuja occidentalis 'Golden Globe'	Golden Globe Arborvitae	18	20"	20"	N/A	3.5'	Evergreen	5 Gallon Container	Well Branched and Full
VP	Viburnum x 'Pragense'	Prague Viburnum	8	36"	20"	N/A	4.5	Evergreen	Balled and Burlapped	Well Branched and Full
	GROUND COVERS, FLOWERS AND PERENNIALS									
ANN1	Viola x 'Wittrockiana' or Begonia semperflorens 'Gin'	Annuals, Yellow and Purple Pansy or Gin Wax Begonia	188	6"	4"	N/A	10"	Deciduous	4" Pot	Plant Pansies in Fall/Winter or Plant Begonias in Spring/Summer
CSR	Cotoneaster salicifolius 'Repens Willowleaf'	Willowleaf Cotoneaster	35	6"	18"	N/A	3.5'	Evergreen	5 Gallon Container	Well Branched and Full
JHBC	Juniperus Horizontalis 'Blue Chip'	Blue Chip Juniper	24	6"	18"	N/A	30	Evergreen	3 Gallon Container	Well Branched and Full
HMPP	Heuchera micrantha 'Palace Purple	Palace Purple Coral Bells	44	6"	6"	N/A	18"	Deciduous	1 Gallon Container	Very Full
HSD	Hemerocallis 'Stella D'Oro'	Stella D'Oro Daylily	88	14"	12"	N/A	12"	Deciduous	4" {PT	Minimum 4 Fans per Container
LMV	Liriope muscari 'Variegata'	Variegated Liriope	219	8"	8"	N/A	12"	Deciduous	4" Pot	Minimum 5 Pips per Pot

LANDSCAPE PLANTING PLAN

REVISIONS:

Yazdian Conststruction Inc.
DEVELOPER

Anderson, Delk, Epps & Associates Inc.
ENGINEERING/PLANNING/SURVEYING
618 GRASSMERE PARK DRIVE / SUITE 4
NASHVILLE, TENNESSEE 37211

Greenbrook North

NOLENSVILLE, TENNESSEE

LANDSCAPE PLANTING PLAN

DATE : 06 - 03 - 16

Job Numbers:
14-123 & 116071089

L-3 Sheet 3 of 4

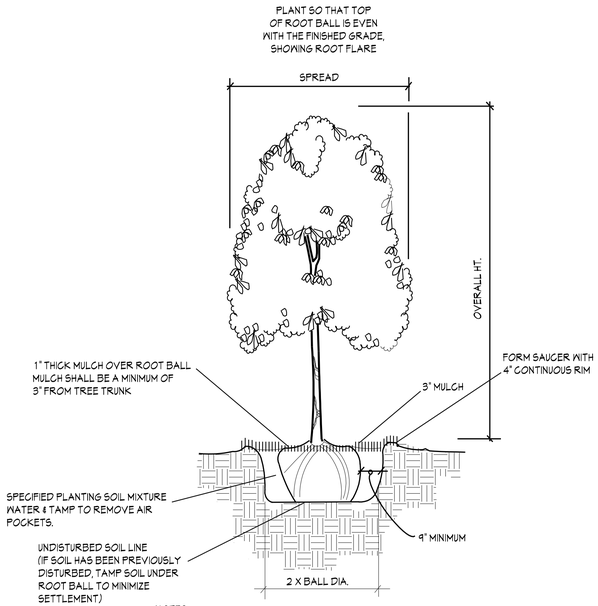

NOTES;
1. REMOVE ALL STRINGS AND/OR WIRE WRAPPED AROUND TRUNK
2. REMOVE ALL STRAPS, ROPES, WIRE AND/OR STRINGS USED TO LIFT THE ROOT BALL.
3. REMOVE BURLAP FROM TOP 1/3 OF OF ROOT BALL.
4. NO TREE STAKING IS PERMITTED

TREE PLANTING DETAIL

SCALE: NOT TO SCALE

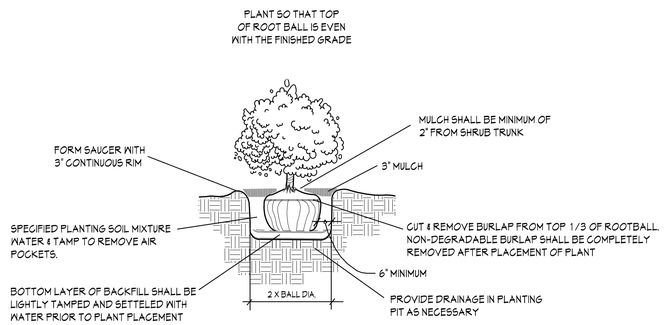

SHRUB PLANTING DETAIL

SCALE: NOT TO SCALE

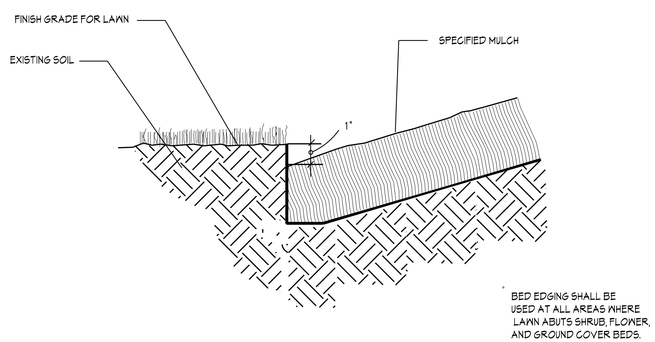

BED EDGING DETAIL

SCALE: NOT TO SCALE

LANDSCAPE NOTES

1. The Contractor shall furnish all necessary equipment, materials, appliances and labor as are necessary to complete the work as shown on the drawings.

2. The Contractor is hereby notified - Underground utilities exist. The Contractor should not assume that locations of underground utilities shown on drawings are correct. The Contractor shall verify their locations prior to commencing work. The Contractor assumes all liability to damages to utilities or injury to himself or others, including death, by commencing digging operations.

3. Stake out all plant location before commencing digging operations. Any series of trees or shrubs proposed to be placed in a particular arrangement will be field checked for accuracy. The Contractor shall relocate any plants not appropriately arranged.

4. All plants shall be grade No. 1, properly formed to the species, true to name as designated in the Standardized Plant names, current edition, Published by the American Joint Committee on Horticulture Nomenclature. The varieties not included therein are generally in conformity with names accepted in the trade. All plants shall be nursery grown, free from insects, insect eggs, scale, fungus, or disease. All plants shall meet the standard for size, culture, and quality for the highest grades and standards, as adopted by the American National Standards Institute in ANSI Z60.1, American Standard for Nursery Stock. All Plants shall be planted where designated on the Planting Plan.

5. Upon securing plant material and before installation, the Contractor shall notify the owner's representative for a pre-installation inspection to make sure that all plant materials meet specifications.

6. No substitutions or other proposed deviations from the plans shall be permitted without written permission from the Landscape Architect or Owner's Representative.

7. The planting soil mix for back-filling trees shall consist of 4 parts topsoil, 1 part sphagnum peat, and 1 part sand. Soil shall be well mixed using a mechanical soil mixer or rotary tiller prior to back-filling planting pits.

8. Mulching. Prior to placement of bark mulch but after plants are installed, trees shall be treated with a pre-emergent, such as Treflan, per the manufacturer's recommendation. Trees shall be mulched with 3" of shredded hardwood bark mulch. Trees shall have a circle of mulch placed around each tree that extends 6" beyond the tree pit (as shown on the tree planting detail). Mulch placed over tree root balls shall not exceed 1" in depth. The Contractor shall submit samples of the mulch to the owner's representative for approval prior to delivery of any mulch to the site.

9. Sodding. All disturbed areas within 10 feet of any paved surface, not covered by buildings, pavement, or trees shall be sodded. Also any areas with a slope of 3 horizontal on 1 vertical or steeper shall be sodded. Sod shall be composed of a fine bladed KY-31 Fescue cultivars such as shown in the seeding specification below. Standard KY-31 Tall Fescue shall not be a component of the sod. Areas to be sodded shall be leveled to an even uniform appearance prior to laying sod. Fertilizer and agricultural limestone in the amounts specified in the Seed Mix below shall be scarified to a depth of four inches except in areas that are hard and compacted. Compacted areas, such as those areas that have been used for temporary vehicular access and are deeply compacted shall be scarified to a minimum depth of 8 inches. The sod shall have a composition similar to the Seed Mix below. The final sod bed shall be uniformly graded with no stones earth clods, sticks, roots, or other debris, larger than 1 inch in any 2 dimensions The Contractor shall submit a list of the sod's seed mixture and the origin of the sod to the owner's representative for approval, prior to delivery of any sod to the site. Sod shall be installed within 24 hours of being machine cut at the sod farm.

10. Seeding. All disturbed areas not covered by buildings, pavement, trees or sod shall be seeded with the seed mix specified below at the rate of 10 lbs. per 1000 sq. ft. Areas to be seeded shall be leveled to an even uniform appearance prior to seeding. Fertilizer and agricultural limestone in the specified amounts shall be scarified to a depth of four inches except in areas that are hard and compacted. Compacted areas, such as those areas that have been used for temporary vehicular access and are deeply compacted shall be scarified to a minimum depth of 8 inches. Seed shall be raked into the top 1/4 inch of soil and shall be mulched as specified. The final seed bed shall be uniformly graded with no stones earth clods, sticks, roots, or other debris, larger than 1 inch in any 2 dimensions. Specifications per 1000 square feet of seeded area:

SEED MIX
4 lbs. Falcon KY-31 Fescue
4 lbs. Rebel III KY-31 Fescue
0.5 lb. Kentucky Bluegrass
1.5 lbs. Annual Ryegrass
Fertilizer- 10 lbs. of 10-10-10
Agricultural Limestone - 75 lbs.
Mulch- 2.5 bales of Cereal Grain Straw

11. Watering. All trees shall be thoroughly watered within one hour of installation. Sod shall be thoroughly soaked to a depth of not less than 6 inches the same day the sod is installed.

12. The Contractor shall provide, in writing, a one year guarantee for all plant materials including lawn areas. Any plant that is not alive or growing in a healthy, vigorous, and manner typical of the plant species shall be replaced at no cost to the Owner. Guarantee period shall begin at written acceptance date for completion of planting.

13. Proposed trees shall be installed as per the planting detail. Trees shall be transplanted at the same ground height in their new locations as the sites they were transplanted from.

14. Dimensions for height, spread, and trunk caliper on the material schedule are a general guide for the minimum desired size of each plant. The dimensions given for the caliper shall always take precedence over the other dimensions.

15. The quantities indicated on the material schedules (Plant Lists) are provided for the benefit of the Contractor, but should not be assumed to always be correct. In the event of a discrepancy, the planting shown on the plans will take precedence over the material schedule. The Contractor shall be responsible for his own quantity calculations and the liability pertaining to those quantities and any related contract documents and/or price quotations.

16. When work is completed, remove all excess materials, debris, trash and equipment from the project site.

17. All proposed trees, shrubs, and ground covers shall be irrigated with an underground irrigation system.

18. The Town of Nolensville requires that all planting be inspected after installation to ensure that installation is in compliance with the approved Landscape Planting Plan. Cost of inspection was not included in preparation of these plans. Inspection is available from the Landscape Architect at a per hour cost.

LANDSCAPE PLANTING PLAN

REVISIONS:

Yazdian Constsruction Inc.
DEVELOPER

Anderson, Delk, Epps & Associates Inc.
ENGINEERING/PLANNING/SURVEYING
618 GRASSMERE PARK DRIVE / SUITE 4
NASHVILLE, TENNESSEE 37211

Greenbrook North

NOLENSVILLE, TENNESSEE

LANDSCAPE PLANTING PLAN

DATE : 11 - 07 - 16

Job Numbers:
14-123 & 116071089

L-4 Sheet 4 of 5

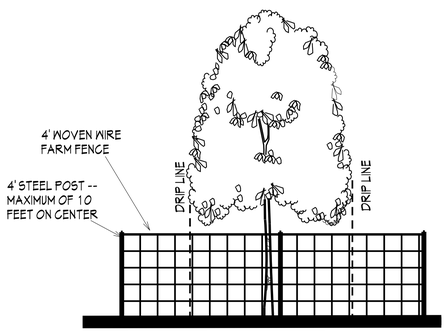

PLACE FENCING ONE AND ONE-HALF THE RADIUS OF THE DRIP LINE, OR AS SHOWN ON THE PLANS, WHICHEVER IS THE FARTHEST FROM EXISTING TREES TO REMAIN.TREES. POSTS SHALL NOT BE PLACED MORE THAN 10 FEET ON CENTER.

TREE PROTECTION DETAIL

SCALE: NOT TO SCALE

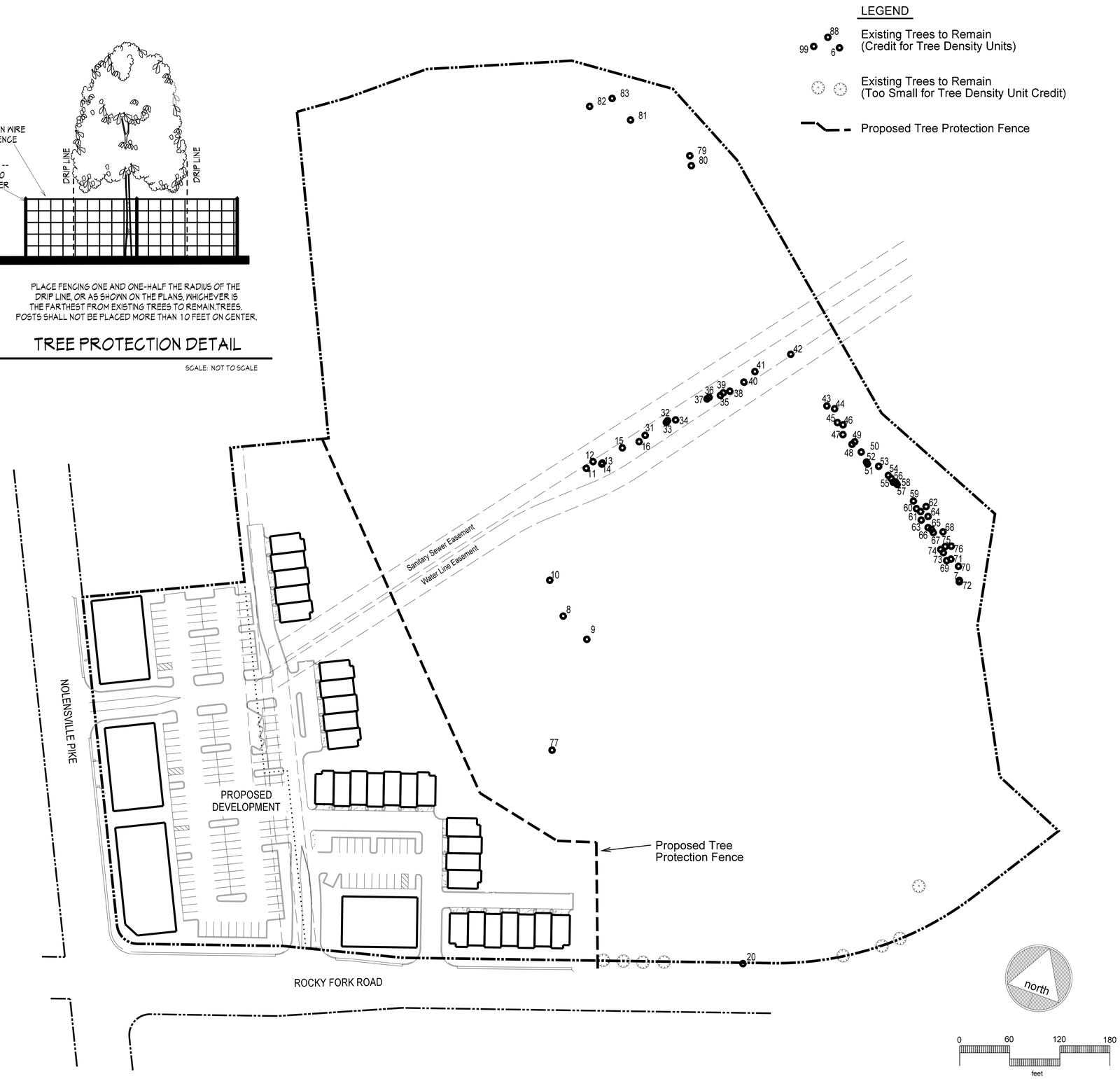

EXISTING TREES TO REMAIN		
KEY	Caliper Inches DBH	DESCRIPTION
7	16	Red Cedar
8	15	White Ash
9	10	Osage Orange
10	8	Hackberry
11	15	Red Cedar
12	13	Osage Orange
13	31	Osage Orange
14	10	Hackberry
15	15	Red Cedar
16	15	Osage Orange
31	24	Red Cedar
32	8	Red Cedar
33	8	Red Cedar
34	8	Red Cedar
35	12	Red Cedar
36	10	Red Cedar
37	20	Red Cedar
38	14	Red Cedar
39	10	Red Cedar
40	26	Black Walnut
41	12	Red Cedar
42	17	Red Cedar
43	8	Red Cedar
44	15	Red Cedar
45	9	Red Cedar
46	12	Osage Orange
47	14	Red Cedar
48	17	Red Cedar
49	10	Osage Orange
50	10	Red Cedar
51	8	Red Cedar
52	10	Red Cedar
53	15	Osage Orange
54	10	Red Cedar
55	10	Red Cedar
56	10	Red Cedar
57	12	Red Cedar
58	15	Osage Orange
59	10	Osage Orange
60	15	Red Cedar
61	8	Red Cedar
62	20	Osage Orange
63	10	Red Cedar
64	10	Osage Orange
65	10	Red Cedar
66	10	Red Cedar
67	15	Osage Orange
68	22	Osage Orange
69	15	Red Cedar
70	22	Osage Orange
71	8	Red Cedar
72	17	Red Cedar
73	14	Red Cedar
74	12	Red Cedar
75	10	Red Cedar
76	10	Red Cedar
77	38	Hackberry
79	16	Osage Orange
80	16	Osage Orange
81	28	Osage Orange
82	21	Osage Orange
83	10	Black Walnut

LANDSCAPE PLANTING PLAN

REVISIONS:

Yazdian Conststruction Inc.
DEVELOPER

Anderson, Delk, Epps & Associates Inc.
ENGINEERING/PLANNING/SURVEYING
618 GRASSMERE PARK DRIVE / SUITE 4
NASHVILLE, TENNESSEE 37211

Greenbrook North

NOLENSVILLE, TENNESSEE

LANDSCAPE PLANTING PLAN

DATE : 11 - 07 - 16

Job Numbers:
14-123 & 116071089

L-5 Sheet 5 of 5